soil WARRIOR

OPERATOR'S MANUAL

ENVIRONMENTAL TILLAGE SYSTEMS

ETS RECOMMENDS owners read and understand this manual before operating their tillage system. They should also follow all safety instructions and keep this and other appropriate manuals inside their tractor at all times.

ENVIRONMENTAL
TILLAGE SYSTEMS

Environmental Tillage Systems, Inc.
85 Prairie Ave SW
Faribault, MN 55201

Phone: 507.332.2231
Fax: 507.334.0369

Email: service@soilwarrior.com
Online: www.soilwarrior.com

Business Hours:
Monday-Friday, 8:00 am - 5:00 pm (CST)

For after-hours service support, contact our service team:

Service Manager
Tanner Schuldt | 507.319.9301

CONTENTS

CONTENTS

1 INTRODUCTION AND WARRANTY

1.1 INTRODUCTION

*Soil **W**ater + Soil **A**ir + Soil **R**etention + Crop **R**esidue + **I**ncorporation + **O**verhead **R**eduction =* ***SOILWARRIOR®***

The SoilWarrior® is a complete system that provides deep and shallow tillage, fertilizer placement, seedbed preparation, and residue management in a wide variety of soil types.

ETS recommends owners read and understand this manual before operating their tillage system. They should also follow all safety instructions and keep this and other appropriate manuals inside their tractor at all times.

The information provided in this manual is current as of the issue date. ETS reserves the right to make design changes without further notice or liability.

1.2 WARRANTY

Warranty Protection. Subject to the further understandings described below, Environmental Tillage Systems, Inc. (ETS) warrants that for a period of one (1) year from the date of delivery of ETS equipment to the retail purchaser of the equipment ("you"), the equipment will (a) be free of material defects in material or workmanship, and (b) function in a manner consistent with any published specifications existing at the time of purchase. This Warranty may be assigned by you during the term of the Warranty to subsequent purchasers of the equipment by written notification to ETS of the new purchasers name, address, and telephone number. Upon acceptance of notification by ETS, it will respond in writing to the new equipment owner acknowledging any remaining warranty coverage. If any components of ETS equipment (e.g. guidance systems) are manufactured by third parties, ETS will, if permitted to do so by the components manufacturer, pass the component manufacturer's warranty on to you. In that case, the component manufacturer's warranty will be in lieu of any warranty of that component by ETS. If the components manufacturer's warranty can only be exercised by ETS, ETS' warranty to you of that component will be identical in breadth and remaining length of the warranty that ETS receives from the component manufacturer. ETS will not provide any additional warranty beyond the manufacturers for any components not manufactured by ETS. ETS follows an ongoing process of product improvements; any test or research parts/components, if included with the purchase of equipment, are not covered by warranty. These parts will be identified at the time of sale to the customer.

a. Extended warranty period for specific items: ETS will provide a two year warranty for the following SoilWarrior® components: frame, toolbar, hubs, lift arms, hitch/hitch plate, and tilt plates. Hub warranty valid only if Schaeffer's Mfg. Co gear lube 293 75W/90 is used. ETS will provide a three year warranty for the following SoilWarrior® components: PWM drive when used with ETS filter system.
b. No other parts/components are warrantied beyond one year.

Operation and Maintenance of Equipment. In order to receive full warranty protection, you must utilize your ETS equipment in a manner consistent with direction contained in this Operator's Manual or other safety or technical documentation provided by ETS. This Warranty will be voided if you materially modify or alter the equipment in a manner that is not authorized in writing by ETS. Furthermore, this Warranty can be voided if the problem results from your misuse of you ETS equipment, from a failure to maintain your ETS equipment, or for an accident that contributed to the problem. There are parts on your equipment, (e.g. consumable parts such as tillage bits, coulters, fertilizer hoses, application components, etc.) that will wear out and need

to be replaced as part of routine maintenance. That replacement will only be covered by this warranty if it is determined that there was a manufacturing defect that caused the part to malfunction or wear out much earlier than it should. ETS follows an ongoing process of product improvements, any test or research parts/components, if included with the purchase of equipment are not covered by warranty. These parts will be identified at the time of sale to the customer.

Disclaimers of Other Warranties. THIS EXPRESS WARRANTY CONSTITUTES THE ONLY WARRANTY, EXPRESS OR IMPLIED MADE BY ETS WITH RESPECT TO ITS EQUIPMENT OR THE RESULTS OF USE OF ITS EQUIPMENT. ALL IMPLIED WARRANTIES, INCLUDING, WITHOUT LIMITATIONS, THE IMPLIED WARRANTIES OF MERCHANTABILITY OR FITNESS FOR A PARTICULAR PURPOSE, ARE EXPRESSLY DISCLAIMED. To the extent that State or federal law limits the extent to which implied warranties can be disclaimed, the disclaimer shall be effective to the full extent permitted by law. Furthermore, unless otherwise provided by law, any required implied warranties shall have the same one year term as ETS' express warranty.

Handling of Warranty Claims. If you believe that you have a warranty claim, you must promptly either contact ETS, or if you purchased the equipment from a reseller, contact the reseller about the problem. You must also provide ETS and/or the reseller all information needed to respond to your warranty claim and must reasonably cooperate in the efforts to remedy the problem. Necessary information may include photographs of components of the equipment that you feel are not functioning properly. Warrantable parts must be delivered to ETS for modification or replacement by the Customer at the Customer's expense. If warranty repair work is done at the Customer's location, at the Customer's request, standard ETS field servicing charges for labor (if a non-ETS manufactured part) and per diem travel charges will be charged to the Customer.

To contact ETS about a warranty issue, call 507.332.2231 and ask for the Service Manager, email us at service@soilwarrior.com, or write to us at 85 Prairie Avenue SW, Faribault, MN 55021. Make sure that your correspondence informs ETS as to how it can best get in touch with you. If you are contacting ETS because your reseller has been unable to satisfactorily address the warranty problems, please also let ETS know what efforts have been made by your reseller and who your reseller is.

ETS will respond to warranty claims as promptly as reasonably possible. Some of the investigation of warranty claims may be done by telephone or the Internet. If ETS determines that a warranty claim is valid, it will make, or cause to be made, the repairs or replacement of parts or components, necessary to bring your equipment into compliance with this Warranty. However, if ETS determines that within a reasonable time it will be unable to make repairs or replacements that resolve the warranty issues, it can, at its sole discretion, resolve the warranty claim by reimbursing you 100% of purchase price and taking back title of the equipment if within one year of purchase, 50% if within the 2nd year of the warranty, and 33% if within the 3rd year of the warranty. The remedies described in this paragraph constitute your exclusive remedies in the event of a breach of warranty.

Limitation of Liability. IN NO EVENT, BE IT FOR BREACH OF WARRANTY, BREACH OF CONTRACT, NEGLIGENCE, OR ANY OTHER CAUSE OF ACTION SHALL ETS BE LIABLE TO BUYER FOR INCIDENTAL, CONSEQUENTIAL, OR PUNITIVE DAMAGES INCLUDING, WITHOUT LIMITATION, LOST PROFITS OR DELAY DAMAGES, EVEN IF SUCH DAMAGES WERE FORESEEABLE BY, OR KNOWN TO ETS BEFOREHAND. ETS' liability is limited to the cost of repair or replacement of the equipment built by ETS or, at ETS' option, repurchase of the equipment.

Warranty Disputes. If you do not feel that ETS complied with its warranty obligations and are dissatisfied with the answers you are getting from the Service Manager, you can write to the ETS Chief Executive Officer. ETS is proud of the quality of its equipment and will thoroughly evaluate any report of customer dissatisfaction. If your concerns are not addressed to your satisfaction through ETS' follow-up to your letter, any disputes relating to this warranty or the quality or condition of equipment you purchased from ETS must be exclusively resolved in the courts of the State of Minnesota, County of Rice, USA.

Read and follow this Operator's Manual provided with the purchase of this tillage system. Read and follow any technical bulletins or other information you subsequently receive from ETS. If there are any questions about the equipment that cannot be resolved through review of this manual, please contact the ETS Service Department. ETS is proud of its commitment to quality, excellent customer service, and positive customer experiences.

Unit with Dry Nutrient Delivery System

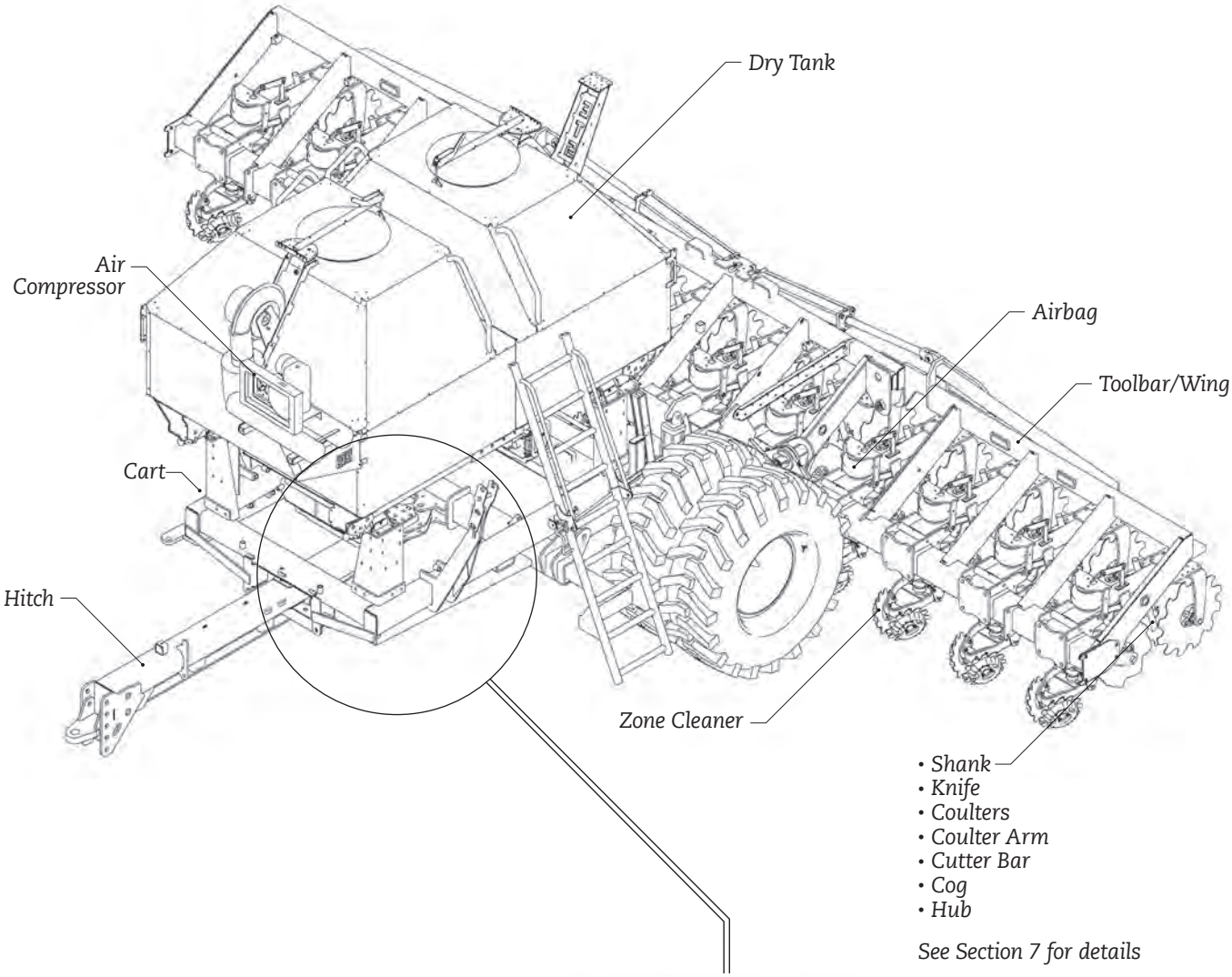

Jack/Jack Storage ›

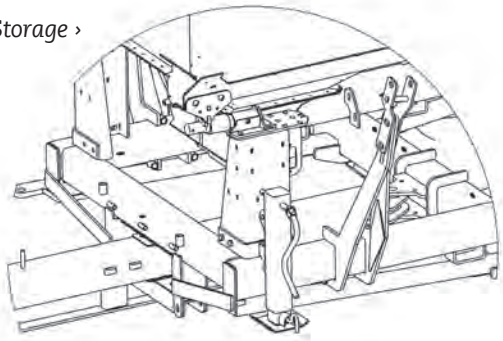

Unit with Liquid Nutrient Delivery System

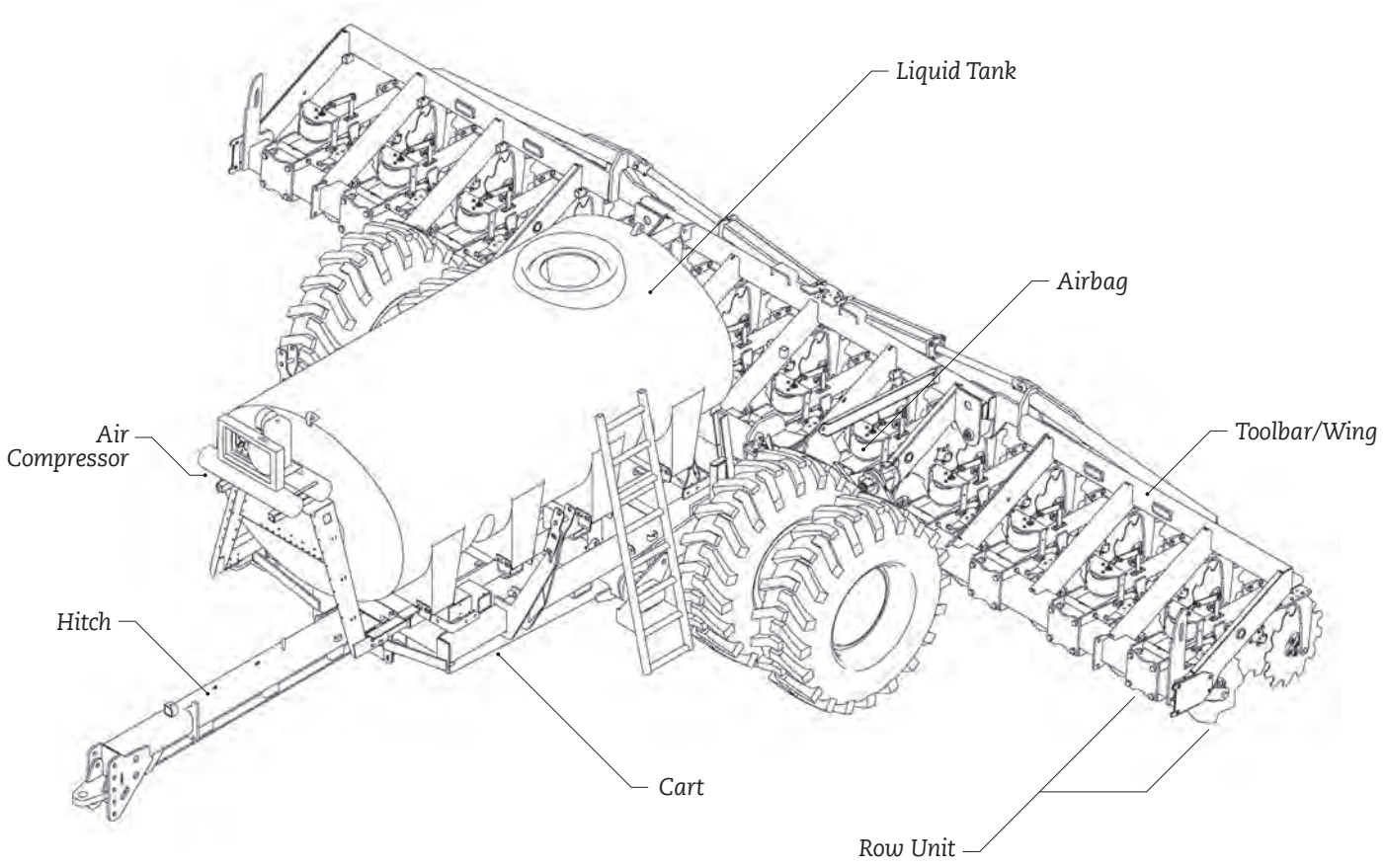

3 SAFETY LANGUAGE AND LABELS

3.1 SAFETY LANGUAGE

Before operating or servicing the SoilWarrior®, you must read, understand, and follow the instructions and safety warnings in this manual.

The level of risk is indicated by the following signal words:

IMPORTANT	CAUTION	WARNING	DANGER
Indicates a situation that could result in damage to the machine or other property.	Indicates a hazardous situation, which, if not avoided, could result in minor or moderate injury.	Indicates a hazardous situation, which, if not avoided, could result in death or serious injury.	Indicates a hazardous situation, which, if not avoided, will result in death or serious injury.

3.1.2 SAFETY LANGUAGE: HAZARDS FROM MODIFYING THE SOILWARRIOR®

Before making any modifications, contact ETS and describe the alteration being considered. Altering may void the manufacturer's warranty and render the machine unsafe for operation.

3.2 SAFETY LABELS ON THE SOILWARRIOR®

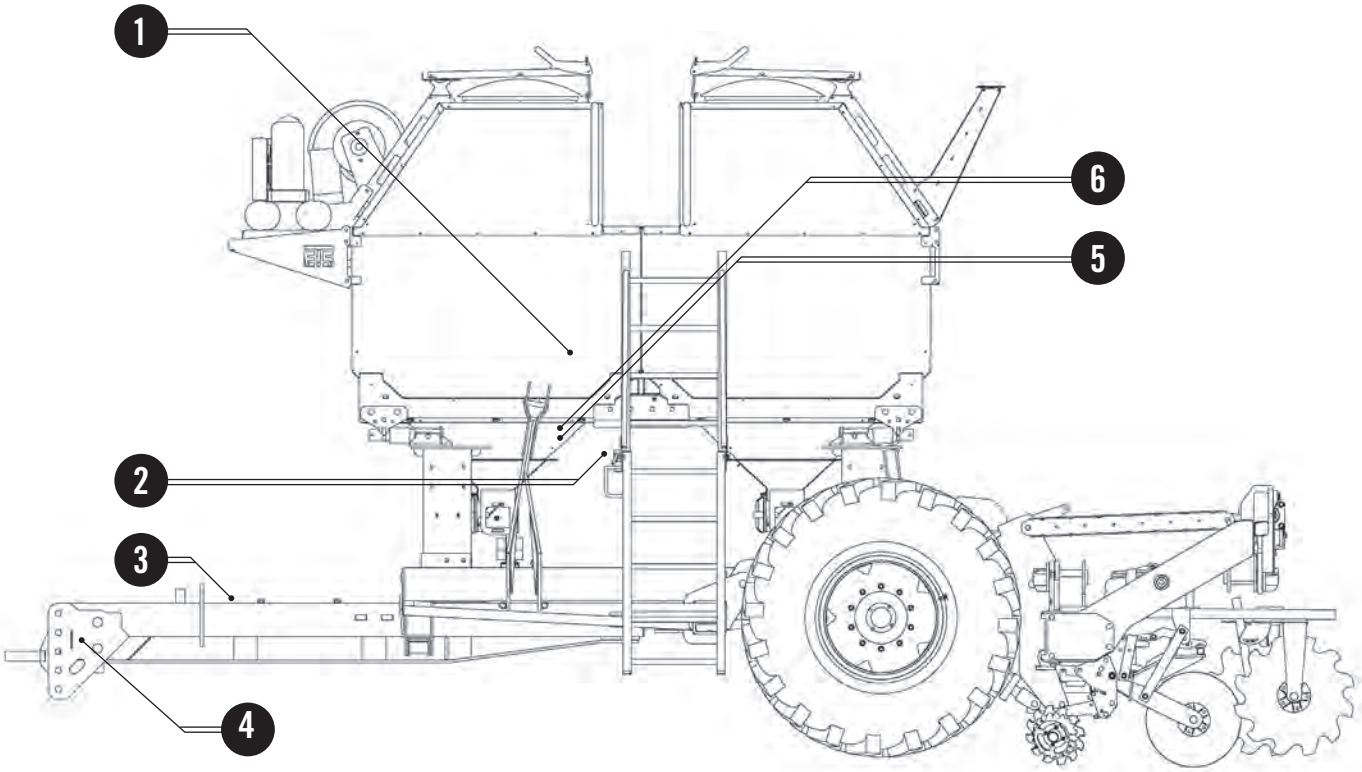

1 IMPORTANT
Fold ladder after each use

2 WARNING
Keep off while the machine is moving or mechanism is running.

3 IMPORTANT
Remove jack during field operations

4 WARNING
Tongue rises rapidly when unhitched from tractor.
To prevent serious injury or death:
- Lower implement to ground before unhitching.

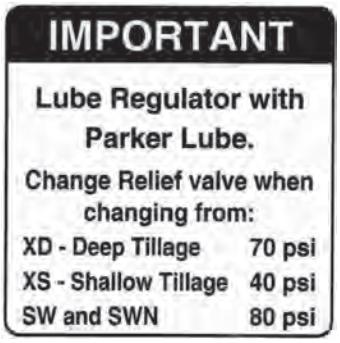

5 IMPORTANT
Lube Regulator with Parker Lube.
Change Relief valve when changing from:
- XD – Deep Tillage (70 psi)
- XS – Shallow Tillage (40 psi)
- SW & SWN (80 psi)

6 DANGER
To prevent Serious Injury or Death From Moving Parts:
- KEEP AWAY – Moving parts can crush and dismember.
- Disconnect and lockout power source before adjusting and servicing.

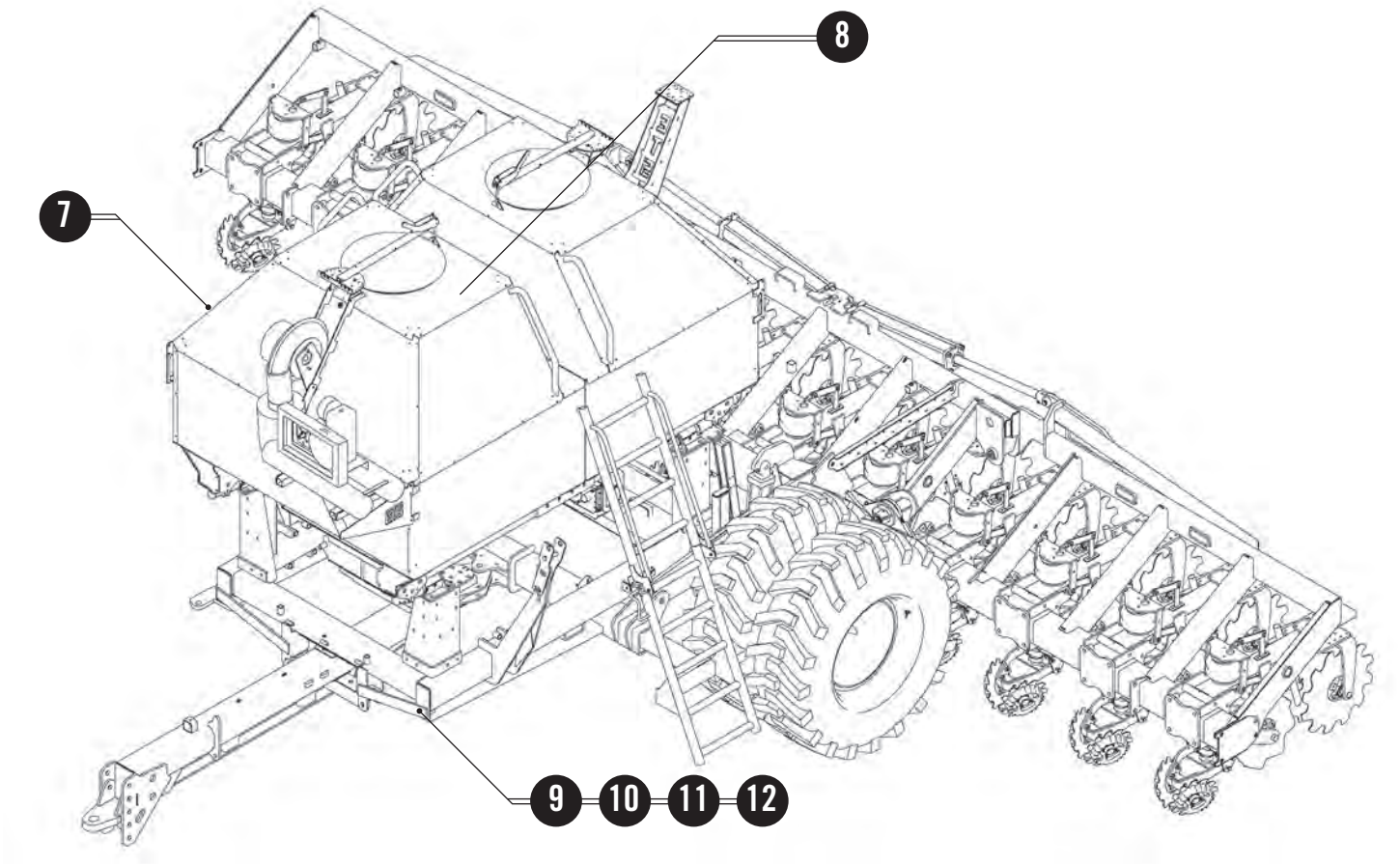

7

DANGER

Toxic Chemical Hazard

WEAR RUBBER GLOVES

- Do not allow chemical or solution to touch skin. Some can be absorbed through the skin.
- Wear rubber gloves and protection gear at all times.

DON'T BREATHE VAPOR

- Stay away from chemical, splash and vapor.
- Do not breathe vapor.
- Wear proper respirator when working with chemicals.

DON'T INGEST CHEMICAL

- Chemicals can be toxic.
- If in eyes or mouth, read chemical manufacturer's instructions and follow exactly.
- Seek medical attention immediately.
- A poison control number is normally inside the front cover of your telephone book.

Failure to follow these instructions will result in serious injury or death.

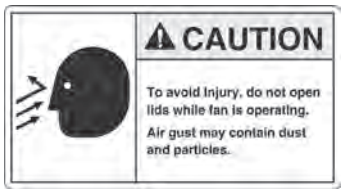

8 CAUTION

To avoid injury, do not open lids while fan is operating.
Air gust may contain dust and particles.

9 CAUTION

Agricultural chemicals can be dangerous. Improper selection or use can seriously injure persons, animals, plants, soil or other property. BE SAFE. Select the right chemical for the job. Handle it with care. Follow instructions on the container label and instructions from the equipment manufacturer.

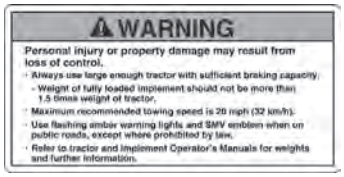

10 WARNING

Personal injury or property damage may result from loss of control.

- Always use large enough tractor with sufficient braking capacity. Weight of fully loaded implement should not be more than 1.5 times weight of tractor.
- Maximum recommended towing speed is 20 mph (32 km/h).
- Use flashing amber warning lights and SMV emblem when on public roads, except where prohibited by law.
- *Refer to tractor and implement Operator's Manuals for weights and further information.*

11 CAUTION

To Avoid Injury Or Machine Damage:

- When servicing machine use proper tools and equipment.
- *Refer to operations manual for instructions.*

12 CAUTION

1 | Read Operator's Manual before using machine.

2 | Stop tractor engine, lower machine to the ground, place all controls in neutral, set park brake, remove ignition key and wait for all moving parts to stop before servicing, adjusting, repairing, unplugging or fitting.

3 | Install and secure all guards before starting.

4 | Keep hands, feet, hair and clothing away from moving parts.

5 | Do not allow riders.

6 | Keep all hydraulic lines, fittings and couplers tight and free of leaks before using.

7 | Clean reflectors, SMV and lights before transporting.

8 | Install safety locks before transporting or working beneath components.

9 | Add extra lights and use pilot vehicle when transporting during times of limited visibility.

10 | Use hazard flashers in tractor when transporting.

11 | Install safety chain when attaching to tractor.

12 | Keep away from overhead electrical lines. Electrocution can occur without direct contact.

13 | Review safety instructions with all operators annually.

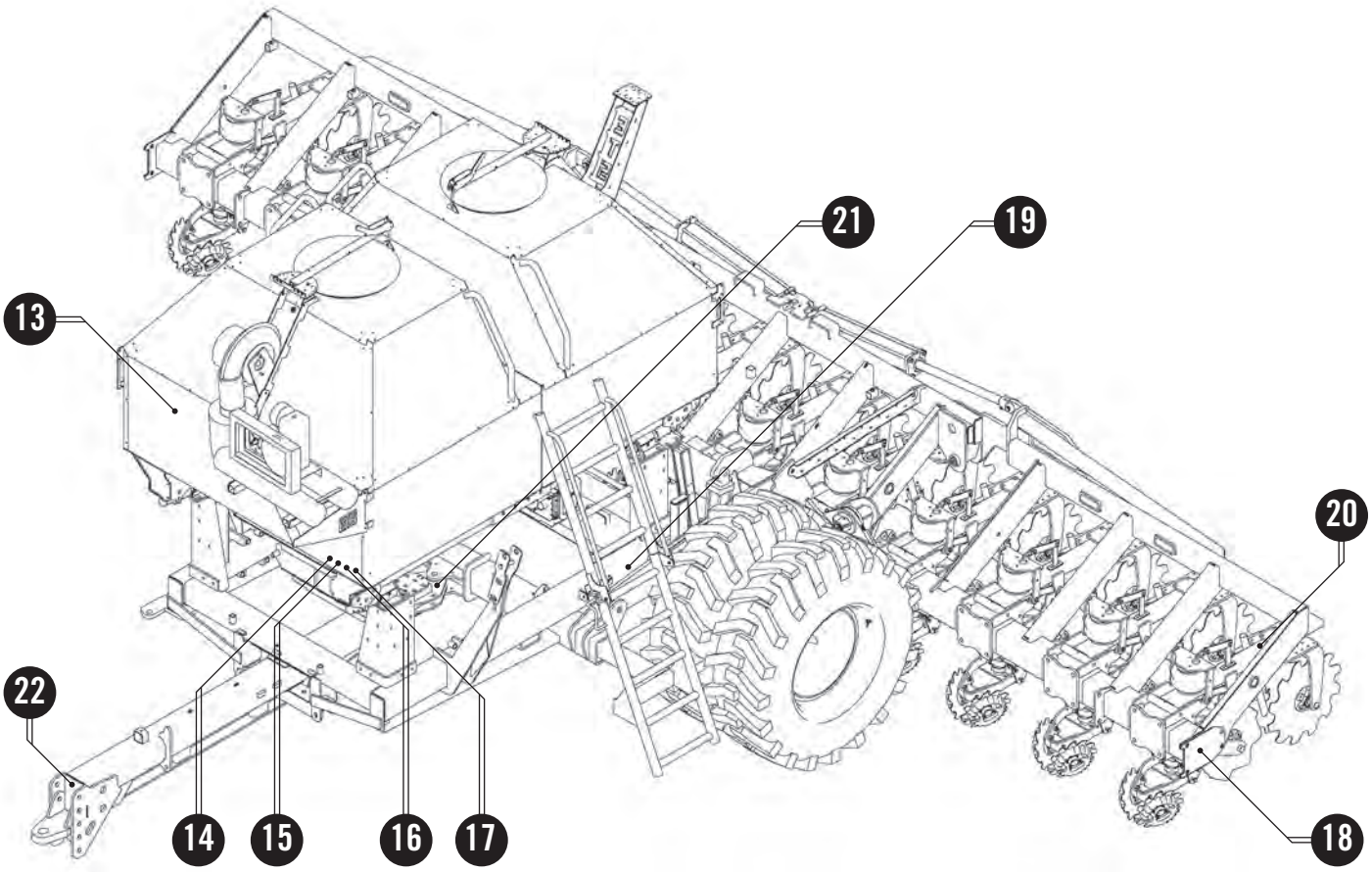

13 DANGER
High Center of Gravity

14 WARNING
Do Not Transport on Roadway Fully Loaded

15 CAUTION

Toolbar MUST be fully raised prior to folding.

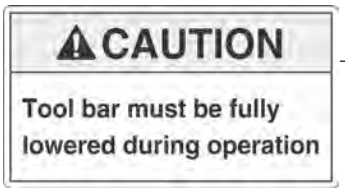

16 CAUTION

Toolbar must be fully lowered during operation.

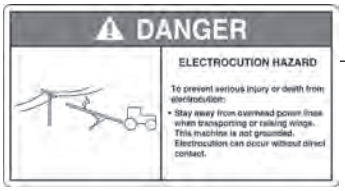

17 DANGER

Electrocution Hazard

To prevent serious injury or death from electrocution:

- Stay away from overhead power lines when transporting or raising wings. This machine is not grounded. Electrocution can occur without direct contact.

18 WARNING

Overhead Wing Hazard

To prevent serious injury or death:

- Stay away from beneath wings when they are in the raised position or are being lowered.
- Keep others away.

19 DANGER

To prevent serious injury or death from pinching:

- Keep all persons and objects clear while any part of this machine is in motion.

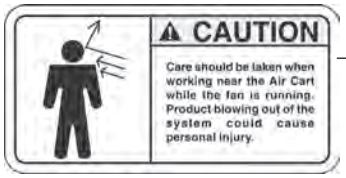

20 CAUTION

Care should be taken when working near the Air Cart while the fan is running. Product blowing out of the system could cause personal injury.

21 WARNING

High Pressure Fluid Hazard

To prevent serious injury or death:

- Relieve pressure on system before repairing or adjusting or disconnecting.
- Wear proper hand and eye protection when searching for leaks. Use wood or cardboard instead of hands.
- Keep all components in good repair.

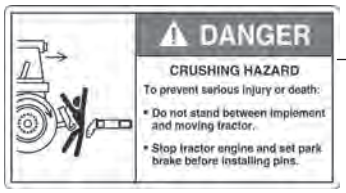

22 DANGER

Crushing Hazard

To prevent serious injury or death:

- Do not stand between implement and moving tractor.
- Stop tractor engine and set park brake before installing pins.

WARNING

COLLISION HAZARD

Know the height, width, and length of the machine. Always be aware of clearances.

SEVERING HAZARD

Coulters, cogs, and tillage blades can sever digits. Plan a safe lifting and moving procedure before handling.

SAFETY LABELS

To protect against death or serious injury, all labels must be on the machine and must be legible. If any of these labels are missing or cannot be read, contact ETS for replacements.

3.3 LABEL CARE

Keep safety labels clean and legible at all times. Replace safety labels that are missing or have become illegible. If a part is replaced that displayed a safety label, install a safety label on the new part. Safety labels are available upon request.

3.4 LIGHTS

It is the responsibility of the customer to know the lighting and the marking requirements of the local highway authorities and to install and maintain the equipment to provide compliance with regulations. Add extra lights when transporting at night or during periods of limited visibility.

WARNING

COLLISION HAZARD

Failure to use accessory lighting while traveling on public roads may lead to collision.

Install and use accessory lights while traveling on any public road.

Verify all lights function properly before traveling on any public road.

3.5 TIRE SAFETY

IMPORTANT: Failure to follow proper procedures when mounting a tire on a wheel rim can produce an explosion, which may result in serious injury or death. Do not attempt to mount a tire unless you have the proper equipment and experience to perform the job the job safely. Inflating or servicing tires can be dangerous. Whenever possible, trained personnel should be called to service and/or mount tires. Always order and install tires with appropriate capacity ratings to meet the anticipated weight being placed on the equipment.

4.1.1 TRACTOR NEEDS: HORSEPOWER GUIDELINES

*SoilWarrior® N System**

Machine Configuration	SoilWarrior®N w/o Knife	SoilWarrior®N w/Knife	SoilWarrior®N w/Twin Row Attachment
6 row	100 hp +	150 hp +	120 hp +
8 row	130 hp +	200 hp +	160 hp +
12 row	180 hp +	300 hp +	240 hp +
16 row	250 hp +	400 hp +	320 hp +
24 row	400 hp +	500 hp +	480 hp +

The horsepower needed depends on numerous factors such as soil type, terrain, soil moisture level, depth of tillage, tillage type, tracks or tires, and hydraulic motor usage. The ratings listed to the left are only suggestions; actual horsepower requirements may vary.

*SoilWarrior® X System**

Machine Configuration	SoilWarrior®X XS Attachment	SoilWarrior®X XD Attachment
6 row	130 hp +	180 hp +
8 row	160 hp +	240 hp +
12 row	240 hp +	350 hp +
16 row	350 hp +	**
24 row	500 hp +	**

** The listed Horsepower suggestions are engine HP ratings, not PTO ratings.*

*** For row crop tillage, it is not recommended to operate the XD attachments at more than 12 rows due to the ballast and power requirements.*

4.1.2 TRACTOR NEEDS: BALLAST

Consult the tractor owner's manual for specific adjustment procedures, tire inflation, wheel spacing, and ballast requirements for the size of SoilWarrior® being operated. Keep in mind that the SoilWarrior® will produce negative drawbar weight when the toolbar is in the raised position without fertilizer in the tank. Drawbar down pressure is affected by fertilizer load and folding toolbar position.

4.1.3 TRACTOR NEEDS: HYDRAULIC REQUIREMENTS

Install adapters if tractor does not have ISO hydraulic couplers. The hydraulic requirements vary between units depending on how the unit is equipped. *Refer to Section 5 for more information.*

The following are options that may be installed on the SoilWarrior®:

- Toolbar Lift
- Toolbar Tilt
- Toolbar Fold with active down force
- Dry Fertilizer Distribution Fan(s)
- Hydraulic Driven Air Compressor Motor
- Liquid Fertilizer Pump
- Hydraulic Dry Fertilizer Variable Rate Drive
- Power beyond return for wing fold relief on 5060 models
- Case Drain

A case drain is needed for any unit that has a dry fertilizer distribution fan and/or hydraulically-driven air compressor motor. The case drain line typically uses a female flat face quick coupler. Consult the tractor manual to ensure proper connection of the case drain.

FLOW SETTINGS

SCV#1 On John Deere – 10; Others at 100% (full flow)

SCV#2 On John Deere – 6.5; Others at about 35%

Tilt, Inner wing, and Outer wing cylinders are orifice-controlled.

SCV Settings

- *The liquid pump, which is determined by the product required.*
- *Air compressor, which should usually be set at on John Deere about 5 or on other about 30% of the flow.*
- *Fans, which will be determined by fan rpms.*

4.1.4 TRACTOR NEEDS: ELECTRICAL REQUIREMENTS

All systems require 12 volts and at least 30 amps to operate.

5 CONNECTION/DISCONNECTION

5.1 CONNECT UNIT TO TRACTOR

1 | Back tractor up to the SoilWarrior®.

2 | Remove jack from storage position and install jack on jack mount.

3 | Adjust hitch height as needed with the jack so that the hitch is between the drawbar and hammer strap. Adjust the hitch point to assure the cart is level when connected to tractor.

4 | Install drawbar pin and lock in position.

5 | Inspect the safety chain for damage and wear. Replace damaged or worn safety chain before using machine.

6 | Route safety chain through chain support. Wrap chain around drawbar support as shown. Hook chain and engage hook safety lock.

7 | Retract the jack so it is not touching the ground or pavement.

8 | Remove pin and jack. Replace jack in storage on unit.

NOTE: *The tractor tire will contact the jack when left in the lifting position. Severe damage will result if not removed.*

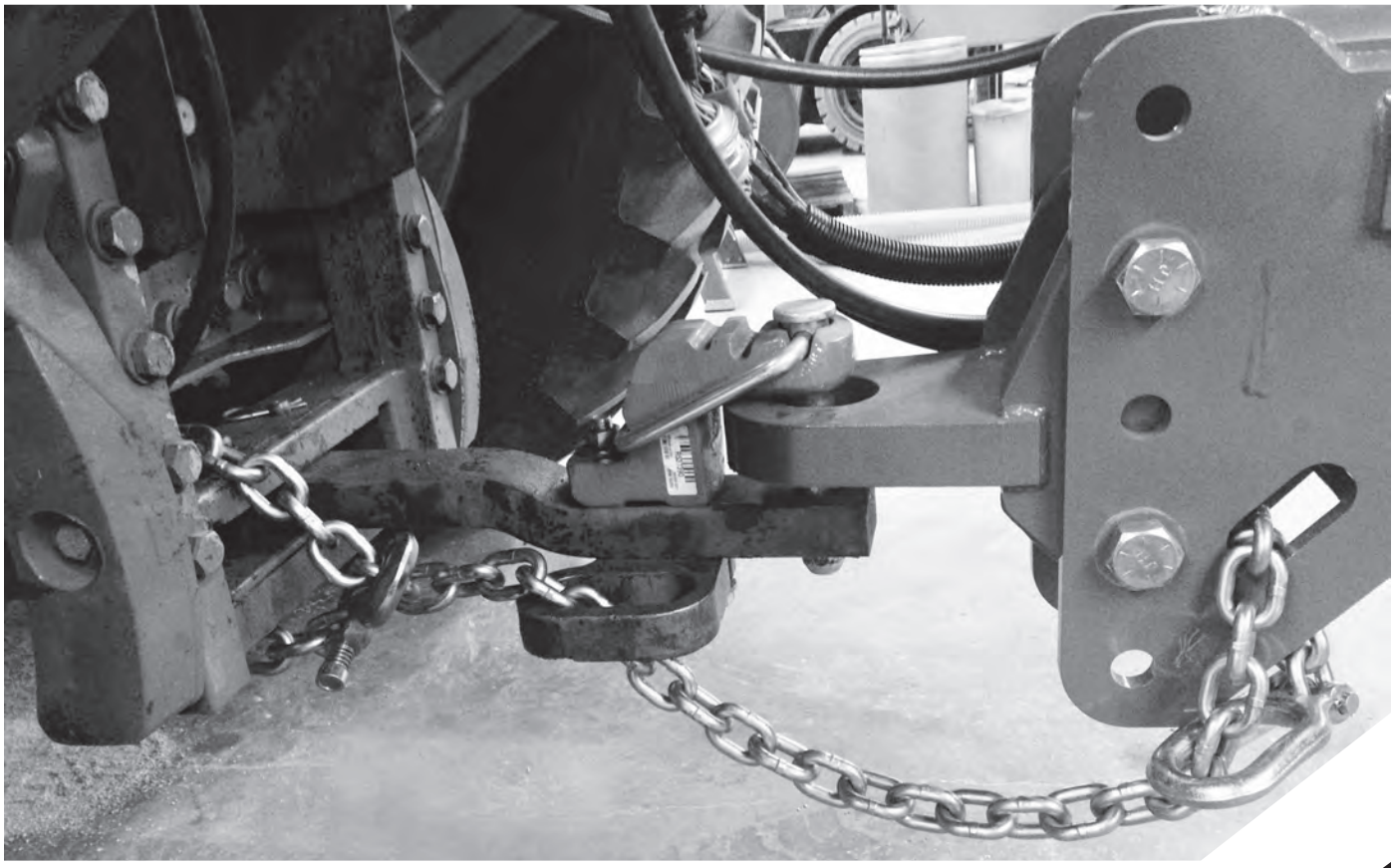

Proper connection of unit to tractor.

5.2 CONNECT HYDRAULIC HOSES

It is suggested to set the tractor SCV flow rate to a low setting and the detent to a middle range when first operating each function so that you start each function at a slow rate.

See chart below for connection instructions.

Function	SCV Number	Hose ID Color & Hydra Grip Combo
Toolbar Lift	1	Green – Green & Black Hydra Grip
Toolbar Tilt	2	Blue – Blue & Black Hydra Grip
Toolbar Fold	2	Blue – Blue & Black Hydra Grip
Cart Steering (if used)	3 — if using John Deere Active Implement Guidance TBD by operator if using any other guidance system	Red – Red & Black Hydra Grip
Hydraulic PWM Drive and Hydraulic Air Compressor	4**	Gray – Gray & Black Hydra Grip
Dry Fertilizer Delivery Fan 1	5	Yellow – Yellow & Gray
Dry Fertilizer Delivery Fan 2 (if equipped)	6	Orange – Orange & Gray
Liquid Fertilizer Hydraulic Pump	6 (if available)	Yellow – Yellow & Black Hydra Grip

** When using the Power Beyond port, a flow control valve and shutoff valve must be used to control the flow to the hydraulic drives and air compressor.

5.3 INSTALL AIR REGULATORS AND MONITOR

Each SoilWarrior® is equipped with a monitor and regulator mount bracket. The bracket is universal and should work with any type of tractor.

Install the monitor per each system's guidelines as recommended in the owner's manual. These systems are compatible with ETS units:

- Raven Industries® Viper 4, Viper Pro, and Envizo Series Field Computers and Slingshot
- Ag Leader® Integra and Versa displays
- John Deere® 2630 display
- Trimble® CFX-750 and FMX displays
- VSS® camera systems

Typical installation of regulators and switch boxes.

5.4 DISCONNECT FROM TRACTOR

To disconnect from the tractor, follow steps listed in Section 5.1 in reverse.

DANGER

Prior to disconnecting, make sure the SoilWarrior® is in a fully folded position or parking stands are in contact with the ground. Keep people away from the unit.

If these precautions are not followed, the tongue of the SoilWarrior® may rise rapidly during disconnection causing serious injury or death.

6 TRANSPORTATION TO FIELD

Once the unit is connected to the tractor, it should be transported in the folded position to the field with no fertilizer in the tank(s). If weight is needed to assist in the transfer of weight to the hitch, it is acceptable to carry up to 2,000 lbs of product in tank(s.) Do not unfold the unit until reaching the field.

6.1 SWITCH BOX FUNCTIONS FOR 2000-5000 SERIES

Fold
This switch allows you to unfold and fold the toolbar. It also enables the lift wheel, inner wings, and outer wing switches.

Working
This function allows the machine to run the lift and wing wheels together in field operation.

Inner wing
This switch folds the inner wing.

Outer wing
This switch folds the outer wing.

Center raise main
This switch raises and lowers the center toolbar in the fold section.

Tilt manual
This switch tilts the toolbar in the fold section.

Scales
This switch turns on the scales with a dry system.

Hyd drives/AC
This switch turns on the power to operate the fertilizer drives and air compressor.

Spare
This switch can be utilized for an extra function if needed.

Outer Wing bypass
This is used during the unfolding to bypass the pressure relief.

Right inner wing
This switch allows the operator to hold the right inner wing while folding or unfolding.

Left inner wing
This switch allows the operator to hold the left inner wing while folding or unfolding.

To balance the lift of the wing wheels and the main frame, adjust the flow valves on the block on the front left side of the cart. There is a valve for the center main and the wing wheels. By turning the valves in or out, it restricts the flow to the main or the wing wheels. The valve for the center main restricts the flow down and is full flow up. The valve for the wing wheels restricts the flow up and full flow down.

6.2 UNFOLD WINGS ON 3000–4500 SERIES

1 | Remove both fold lock wing pins.

2 | Disengage lift lock. If unable to pull lever into disengaged position, the toolbar needs to be raised. Pull back on SCV #1 to lift the toolbar. Toolbar will rise. Disengage Lift Lock.

NOTE: If you have to push forward on SCV #1 to raise the toolbar, your hoses are reversed. Switch the hoses on SCV #1 to the opposite ports.

3 | Disengage Tilt Lock valve.

4 | Activate the Fold circuit switch.

5 | Activate SCV #2 forward to fold out wings.

NOTE: If you have to pull back on SCV #2 to fold out wings, your hoses are reversed. Switch the hoses on SCV #2 to the opposite ports.

6 | Deactivate the Fold circuit switch. Activate the Tilt switch.

7 | Activate SCV #2 forward to fully tilt toolbar into working position.

8 | Activate SCV #1 forward to lower the toolbar.

6.3 FOLD WINGS ON 3000–4500 SERIES

To fold the unit, reverse the steps listed in Section 6.2.

6.4 UNFOLD WINGS ON 5000 SERIES

1 | Remove both fold lock wing pins.

2 | Disengage lift lock. If unable to pull lever into disengaged position, the center toolbar may need to be raised. Activate the center raise main switch and pull back on SCV#1 to raise the toolbar.

NOTE: If you have to push forward on SCV #1 to raise the toolbar, your hoses are reversed. Switch the hoses on SCV #1 to the opposite ports.

3 | Disengage Tilt Lock Valve.

4 | Activate Fold circuit switch.

5 | Activate the Inner Wing switch. Activate SCV #2 forward to unfold the inner wings completely.

NOTE: If you have to pull back on SCV #2 to unfold wings, your hoses are reversed. Switch the hoses on SCV #2 to the opposite ports.

6 | Deactivate the Inner Wing switch.

7 | Activate the Outer Wing switch. Activate SCV #2 forward to unfold the outer wings completely. If the outer wings do not cycle, depress the Outer Wing Bypass switch while activating SCV #2 forward. This allows full hydraulic pressure to the outer wing cylinders.

8 | Deactivate the Outer Wing switch. Activate the Wing Wheel switch. Extend the wing wheels completely by activating SCV #1 forward.

9 | Deactivate the Fold switch. Activate the Working switch. Activate SCV #1 to fully tilt toolbar into working position.

6.5 FOLD WINGS ON 5000 SERIES

To fold the unit, reverse the steps listed in Section 6.4.

6.6 ATTACHING AND DETACHING WING SECTIONS ON 4500 SERIES UNIT

Detachable wing sections can be removed to match the tillage system to your tractor.

1 | Position the SoilWarrior® and tractor so that you have room to move forward at least 50 feet.

2 | Be sure that the area you are on is firm enough that the detachable wings do not sink into the soil.

3 | With the toolbar in transport position and the row unit air pressure at zero, position the detachable wing row units over center as if they were at the top of their up travel.

4 | Insert the row unit lockup pins in the holes below the lower parallel link on each wing row unit on the SoilWarrior® X.

5 | Unfold the toolbar and tilt the toolbar to a horizontal position. Turn the tilt stop rod complete out to allow the toolbar to tilt into the needed profile.

6 | Raise the toolbar to the fully-raised position and engage the toolbar lift locks.

7 | Insert the parking stands in the mounts on each wing section using the pins and clips supplied.

8 | Disconnect all the fertilizer placement lines that supply the wings from the main fertilizer system, and place the supply lines that were disconnected on the wing and secure.

9 | Disconnect the row unit airline that supplies the row units on the wings, and cap or connect the air supply line to the appropriate connection.

10 | Assure all the hardware and supply lines for the detachable wings are clear of the main section, and secure the removed hardware and fasteners for storage.

12 | Slowly lower the toolbar until the detachable wings front and rear parking stands are in contact with the ground.

13 | Loosen and remove the 1 inch bolts and nuts on the wing plates.

14 | Raise the SoilWarrior® Toolbar. Drive the unit forward until it is clear of the detached wings.

15 | Position the detached wings and row units in a safe area for storage. Some toolbar sections have pallet fork pockets to aide in the transport of the detached wing and row units.

For installing the wings, position the wing section close to the unit for easy alignment and reverse the previous steps.

For dry fertilizer systems, ensure that the internal block-out plates are installed or removed on the affected rows. This depends on the application. For example, rows not in use must have internal block plates installed on the effected meter rolls and caps installed onto the air distribution lines not being used.

Air distribution lines must be removed from the fan distributor and caps placed on both sides of each run on both collector bottoms. Caps should also be placed on the empty fan distributor openings. To add lines back into the system, reverse the process.

> **NOTE:** *If adding lines into the fertilizer distribution system, make certain the internal block-out plates are removed on the respective runs.*

The fan outlets must match the meter runs used. In the event that an airline from the fan to the meter collector bottom is left connected and the meter block-off plate is installed, fertilizer will be siphoned though the meter rolls of the connected meter runs when the unit is stopped and the fan is running.

For liquid fertilizer systems, be sure to cap the disconnected section or reconnect the lines on the wings that were attached.

6.7 PROPER HITCH AND CART POSITION

The hitch is set properly when:

- The cart frame is level with the ground or positioned at a slight upward angle. If not set properly, adjust the hitch point position *(see Section 6.7.1.)*
- The toolbar and row units are level to a slightly downward angle. This can be adjusted by the Toolbar Tilt.
- There is approximately 20 inches between the bottom of the toolbar and the ground. This is especially important when using zone cleaners.

6.7.1 HITCH AND CART POSITION: HITCH ADJUSTMENT

1 | Place tractor transmission in park, stop engine, and remove key.

2 | Chock the tires.

3 | Lower the toolbar to the ground to eliminate negative drawbar weight. Set air pressure above 5 psi on row unit regulators and zone cleaner air pressure at 0 psi (if installed).

4 | Remove jack from storage position and install jack on jack mount.

5 | Install the pin into holes through the jack and mounting plate. Install clip on pin. Release drop leg. No more than three holes should be exposed on the drop leg.

6 | Extend the jack to remove weight from the hitch.

7 | Remove the hitch bolts and lock nuts from the hitch point.

8 | Raise or lower the hitch using the jack to align four holes in the hitch.

9 | Reinstall the bolts and lock nuts from the hitch point.

NOTE: Moving the hitch point one hole position changes 4 inches of elevation at the front of the hitch. Inverting the hitch point changes the elevation 2 inches.

10 | Retract the jack and the drop leg.

11 | Remove the jack from the jack mount and place in storage position.

12 | Load tank with some product. Re-check the toolbar.

13 | Re-check the row unit operating position.

14 | Repeat hitch adjustment if necessary.

NOTE: Consider making any test passes of the unit in the field at an angle to where you plan to do your final zoning — this allows for timely set up and will not affect This also works well for setting the cart guidance.

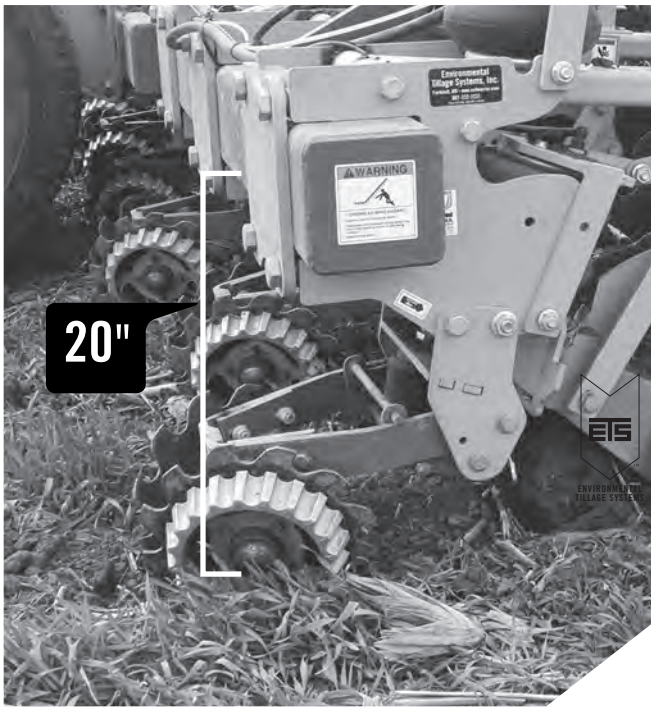

Distance between the bottom of the toolbar and ground

7 OPERATION OF THE ROW UNITS

Before operating the unit in the field and after the first day of operation, inspect the unit for any loose or missing fasteners, damaged components, missing shields or guards, and hose leaks or loose fittings. Repair, tighten, or replace these items as needed.

IMPORTANT: *SoilWarrior® row units are not designed to penetrate ground that is very dry and extremely hard (more than 400 pounds on a soil compaction tester).*

Damage from field operation in frozen ground or from sharp turns will void the machine's warranty.

7.1 GENERAL INFORMATION ABOUT AIR SYSTEMS

The SoilWarrior® N and SoilWarrior® X require air pressure for operation. The unit may be equipped with an on board compressor (hydraulic or electrically-driven) or an air hose connected to the tractor compressor. These will pressurize the row unit air system. Pressure to the air bags is regulated from 5–70 psi for the SoilWarrior® X and 5–80 psi for the SoilWarrior® N by a pilot regulator mounted in the tractor cab. The gauge on the cart and the cab regulators may have a pressure difference of up to 10 psi depending on the installation. The gauge on the cart indicates the pressure in the row unit airbag. When operating at higher pressures and the relief valve discharges, the system pressure must drop to less than 30 psi before the relief valve resets.

Be sure to have the correct relief valve installed depending upon the row unit and the tillage attachment installed.

Air bags on each row unit provide positive and uniform down pressure. Air pressure can be controlled from the cab to adjust the down force needed to keep the gauge wheels and coulters at the desired working position while driving through the field.

7.2 SOILWARRIOR® X: OVERVIEW AND OPERATING PROCEDURES

The SoilWarrior® X can be used in both phases of crop production. Primary deep tillage (XD) and secondary shallow tillage (XS) by switching the coulter setup on each row unit.

The XD tillage system provides deep primary tillage up to 12 inches deep and 12 inches wide, while incorporating fertilizer into the zone. The soil is fractured wider than the loose dirt may show at the surface depending upon soil conditions.

The XS tillage system provides up to 6 inches of depth in a 12-inch-wide zone. It can be used to refresh existing zones or as a shallower primary tillage option. A Twin Row attachment can be used to widen the tilled zone to 15 inches.

> ***NOTE:*** *Deep tillage with XD is recommended to be done at speeds of less than 7.5 mph. Operating speed will be determined by terrain, soil type, moisture, residue, and tractor horsepower.*

An adjustable gauge wheel operates in front of the coulters on each row unit to assist in maintaining uniform depth. Moving the gauge wheels to one of the three positions regulates the running depth of the coulters. If equipped, the tilt of the toolbar will also affect the depth. On non-tilting toolbar units, the hitch position of the unit in relationship to the tractor's drawbar height will also affect the tillage depth.

Two 25 inch free-floating containment coulters operate behind the tillage system on each row unit and folds soil into a berm. The containment coulters are adjustable so the operator can produce the type of soil berm that is right for their operation.

> ***NOTE:*** *The SoilWarrior® X row unit uses a gauge wheel to control the depth, and the containment coulters are free floating. In certain conditions, the gauge wheel may be removed. ETS has kits available for the removal of the gauge wheel.*

If equipped with a nutrient delivery system, product is placed behind the tillage system. Nutrients are blended throughout the zone.

> ***NOTE:*** *Zone height and width vary on soil types, residue type and amount, speed, and moisture levels.*

Shallow tillage is recommended to be done at speeds above 5 mph. A higher speed creates more soil movement and generally produces a more functional soil berm and better seedbed. The best speed will be determined by terrain, soil type, soil moisture, residue amount, tractor horsepower, and operator experience.

7.2.1 SOILWARRIOR® X: CONVERT FROM DEEP TO SHALLOW TILLAGE

NOTE: The hardware from the deep tillage system is used on the shallow tillage system.

NOTE: For row unit spacing less than 30 inches, lock up pins may aid in servicing the unit.

1 | Lower the toolbar and tilt the toolbar down so the cog wheels are on the ground, but the row unit is in the fully-raised position.

2 | Relieve all down-force air pressure from the row units.

3 | Place tractor transmission in park, stop engine, and remove key. Chock the tires.

4 | Position the cog wheel so that coulters are in contact with the ground, and remove the ¾ x 2¼ inch fine thread bolt (7) and washer from the lower cog wheel arms on both sides of the cog wheel. The cog wheel and hub will sit in between the arms after the bolts are removed.

5 | Start the tractor and raise the toolbar to the fully-raised position to engage the toolbar lift locks, tilt the toolbar to allow access to the row units. Remove chocks.

6 | Place tractor transmission in park, stop engine, and remove key.

7 | Loosen but do not remove upper bolts (4). They support the trailing arm for the containment coulter assembly.

8 | Remove the four straight cutter bar bolts (5).

9 | Remove the lower arms (8).

10 | Move spacer pin to bottom position.

11 | Position left shallow tillage coulter arm on row unit with the front hole of the coulter arm into the second hole up from the bottom of the rear parallel link. The cog wheel arm was in the bottom hole. Be sure to install bolts so nuts are to the inside of row unit.

12 | Install left shallow coulter arm.

13 | Install right shallow tillage coulter arm.

14 | Install angled cutter bar. Flange nuts cannot be used in this position.

15 | Install wavy coulter on each of the shallow tillage arms. Use flange top lock nuts with the nut to the hub side.

16 | Tighten bolts and nuts in the following sequence and to the specified torque:

- (2) – 375 foot-pounds of torque
- (4) – 270 foot-pounds of torque
- (3) – 375 foot-pounds of torque

17 | Loosen and remove the bolts on the left coulter arm bottom plate. Move the containment coulter arm to the desired position. For shallow tillage, the left containment coulter arm must be in the forward position. The inside edge of the coulters should clear the outside of the shallow tillage coulter arms by a minimum of a half inch.

18 | The pressure relief on the toolbar regulator valve must be changed. Remove the deep tillage 70 pound relief valve and install the shallow tillage 40 pound relief valve.

19 | Be sure that the ¾ x 11 inch (11) bolt is in the correct position for shallow tillage.

NOTE: Do not over tighten the ¾ inch top lock nuts and 11 inch bolt. Must be able to rotate after tightening.

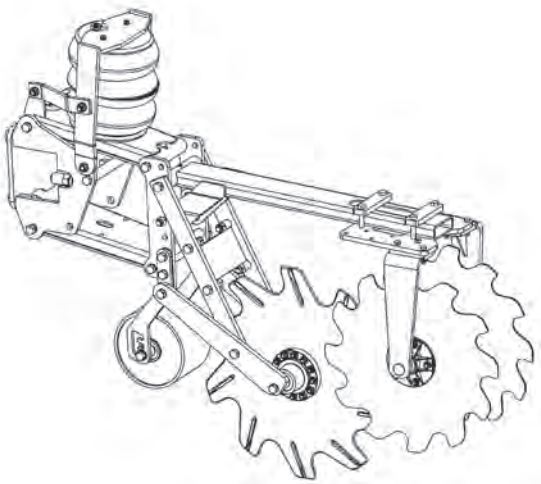

XD System

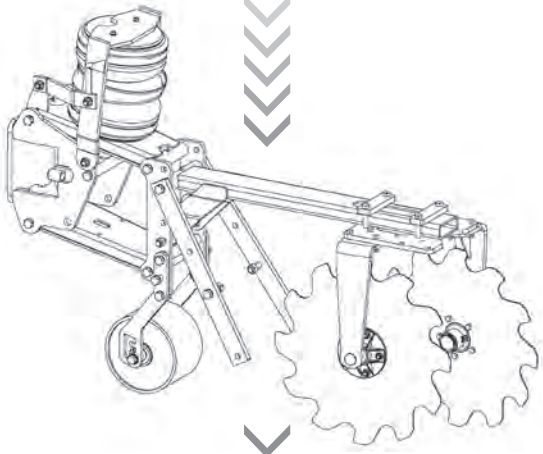

XD System with cog wheel removed

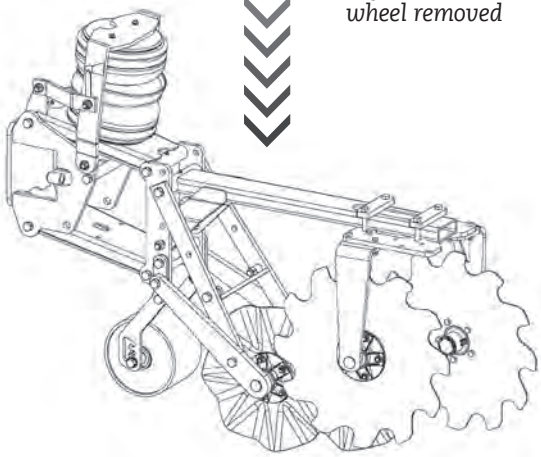

XS System

XD Row Unit

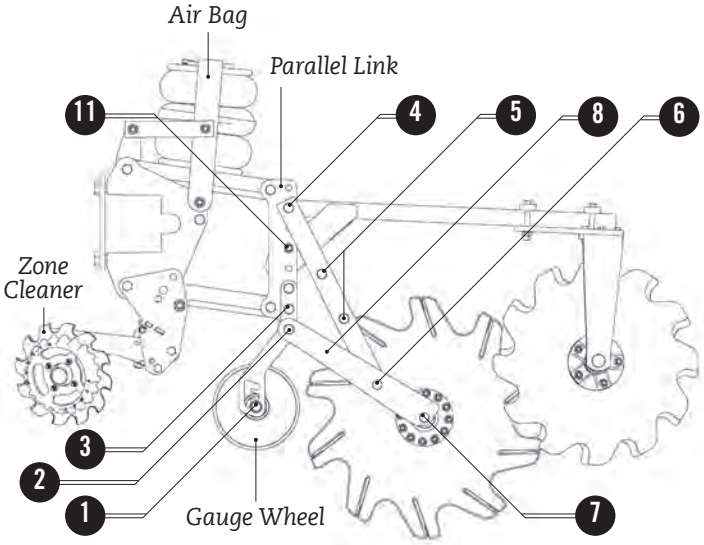

7.2.2 SOILWARRIOR® X: CONVERT FROM SHALLOW TO DEEP TILLAGE

NOTE: The hardware from the deep tillage system is used on the shallow tillage system.

NOTE: For row unit spacing less than 30 inches, lock up pins may aid in servicing the unit.

1 | Fully unfold and lower the toolbar on to the lift stop and tilt the toolbar to allow access to the row units and set the toolbar lift lock.

2 | Relieve all down-force air pressure from the row units.

3 | Place tractor transmission in park, stop engine, and remove key. Chock tires.

4 | Loosen but do not remove upper bolts (4) on the upper coulter arm on each side of the row unit. They support the trailing arm for the containment coulter assembly.

5 | Remove the wavy coulters on both arms.

6 | Remove angled cutter bar.

7 | Remove the two lower arms.

8 | Install lower arm in bottom hole.

9 | Install straight cutter bar.

10 | Position the cog wheel and hub to allow the installation of the lower cog wheel arm hardware on both sides of the cog wheel hub.

11 | Tighten bolts and nuts in the following sequence and to the specified torque:

- (1) – 375 foot-pounds of torque
- (2) – 375 foot-pounds of torque
- (7) – 375 foot-pounds of torque
- (5) – 270 foot-pounds of torque
- (3) – 375 foot-pounds of torque
- (4) – 375 foot-pounds of torque

12 | Loosen and remove the bolts on the left coulter arm bottom plate. Move the containment coulter arm to the desired position. For deep tillage, the left containment coulter arm must be in the rear position for row spacing greater than 22 inches. For spacing of 20 inches, the left containment coulter arm must be in the center position. The inside edge of the coulters should clear the outside of the shallow tillage coulter arms by a minimum of a half inch.

13 | The pressure relief on the toolbar regulator valve must be changed. Remove the shallow tillage 40 pound relief valve and install the deep tillage 70 pound relief valve.

14 | Be sure that the ¾ x 11 inch bolt is in the correct position for deep tillage.

NOTE: The ¾ inch top lock nuts must not be over tightened. The 11 inch bolt must be able to rotate after tightening.

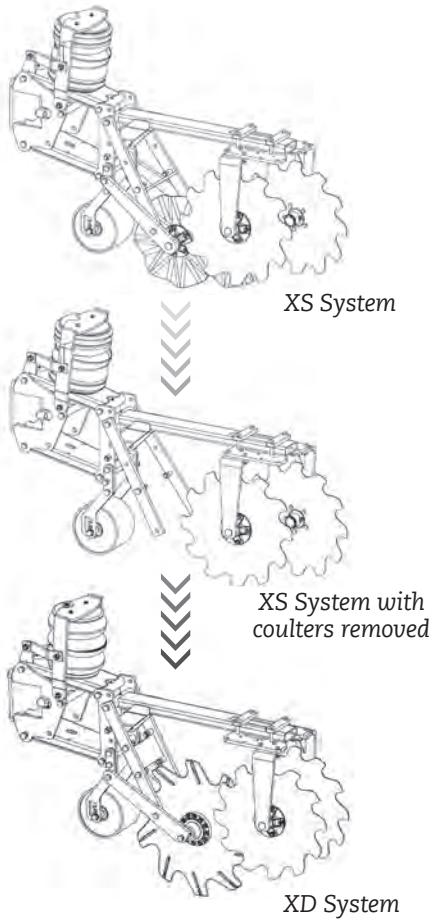

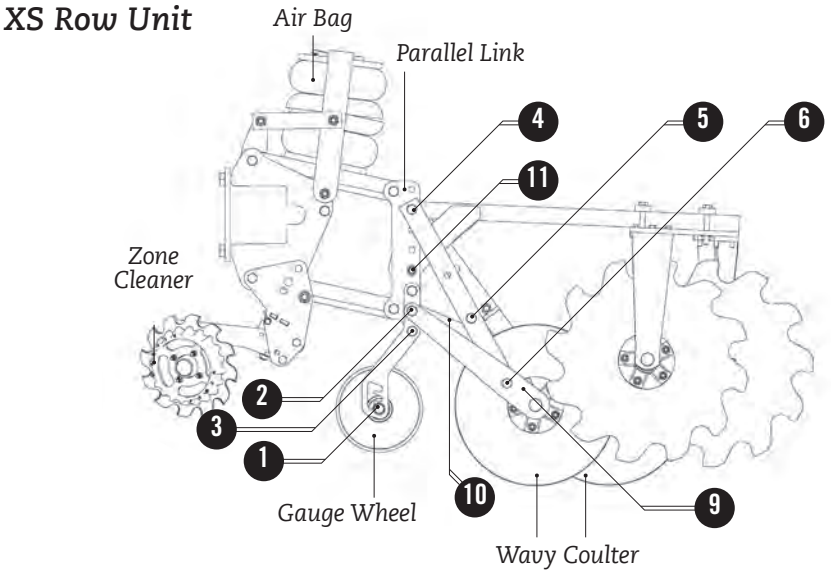

7.2.3 SOILWARRIOR® X: GAUGE WHEEL ADJUSTMENT

1 | Raise the toolbar to the fully raised position in order to set the toolbar lift lock and tilt the toolbar to allow access to the row units.

2 | Engage the toolbar lift and tilt lock.

3 | Place tractor transmission in park, stop engine, and remove key. Chock tires.

4 | Loosen but do not remove bolts on each side of the gauge wheel.

5 | Move the gauge wheel to desired position *(see table)*.

6 | Tighten bolts to 375 foot-pounds of torque.

7 | Repeat steps for remaining row units.

Gauge Wheel Position	Shallow Tillage Depth	Deep Tillage Depth
Bottom Slot	3 inch	10 inch
Center Slot	4 inch	11 inch
Top Slot	5 inch	12 inch

The table lists approximate depths and may vary depending upon tilt pitch of toolbar, hitch position, row unit air pressure, and soil hardness. Values are based on 20 inch diameter coulter and 30 inch diameter cog wheel.

7.2.4 SOILWARRIOR® X: STARTING FIELD OPERATION WITH DEEP TILLAGE SETUP

NOTE: Primary deep tillage should be done with the containment coulter trailing arm adjustment bolt in the top slot.

1 | Adjust the gauge wheels to the desired position.

2 | Adjust containment coulters to correct setting. When positioned correctly, there should be approximately 9 inches between the containment coulters at the narrowest position.

- In wet soil, open coulters at least 10 inches allows soil to flow through.
- In dry soil, narrowing coulters to 8 inches allows soil to stand taller in the zone.
- Soil berms will vary according to soil type and moisture, so the operator must monitor performance and adjust coulters for conditions.

NOTE: For best performance, the containment coulters must be rotating at all times.

3 | Start with row unit down pressure of about 50 psi.

4 | Load fertilizer system. Adjust and calibrate per instructions in Section 8.

5 | Once in the field, lower the row units and bring the tractor speed up to approximately 4 mph.

6 | Check the running depth after driving about 200 feet in the field at the suggested operating speed. Upon stopping, the position of the row units, toolbar, and cart will change from the true operating position. If possible have an assistant watch from a safe position during operation to assure correct operation set-up (*see Section 6.7*). If equipped, use the camera mounted below the toolbar to watch the row units at operating speeds.

7 | The zones should be about 7 – 12 inches deep in the center of the zone and mounded to create a berm up to 5 inches high and 12 inches wide.

8 | If the gauge wheel is pressed firmly against the soil and the cog wheel is firmly in the ground, the machine is set properly. If the gauge wheel is not turning and isn't contacting the soil, increase the air pressure by increments of 5 psi until firmly in contact with the soil. Adjustments must be made while moving.

9 | If the gauge wheel is sliding or pressed into the soil 1 inch or more reduce the air pressure by 5 psi until the desired gauge wheel operation is achieved.

10 | If 70 psi cannot be reached or if the pressure exceeds 70 psi, check the relief valve on the remote controlled regulator on the cart.

NOTE: If the gauge wheel is in contact with the soil the majority of the time, periodically leaving the soil is acceptable. Check in average soils; avoid field headlands when setting the pressures. Monitor this throughout the fields.

Never exceed 70 psi of down pressure with the deep tillage system. Most field conditions require 40-50 psi.

For best results, run a SoilWarrior® XD at speeds less than 7.5 mph.

IMPORTANT: In rocky conditions, adjust the air system pressure as low as to keep the desired tillage depth. Damage from field operation in frozen ground or from sharp turns will void any and all warranties

7.2.5 SOILWARRIOR® X: STARTING FIELD OPERATION WITH SHALLOW TILLAGE SETUP

NOTE: Shallow tillage should be done with the containment coulter trailing arm adjustment bolt in the bottom slot. This bolt must be able to rotate after tightening.

1 | Adjust gauge wheels to desired position.

2 | Adjust containment coulters to correct setting. When positioned correctly, there should be approximately 9 inches between the containment coulters at the narrowest position.

- In wet soil, open coulters at least 10 inches allows soil to flow through.
- In dry soil, narrowing coulters to 8 inches allows soil to stand taller in the zone.
- Soil berms will vary according to soil type and moisture, so the operator must monitor performance and adjust coulters for conditions.

NOTE: For best performance, ensure containment coulters are rotating at all times.

3 | Start with a down pressure 20 psi when conditioning a fall zone. Start with down pressure of 25 psi when establishing a new zone in the spring.

4 | Load fertilizer system. Adjust and calibrate per instructions in Section 8.

5 | Once in the field, lower the row units and bring the tractor speed up to approximately 6 mph.

6 | Check the running depth after driving about 200 feet in the field at the suggested operating speed. Upon stopping, be aware that the position of the row units, toolbar, and cart will change from the true operating position. If possible have an assistant watch from a safe position during operation to assure correct operation set up *(see Section 7.1)*. If equipped, you should have your toolbar-mounted camera adjusted so you can watch the row units at operating speeds.

7 | The zones should be about 3–5 inches deep and mounded to create a berm up to 5 inches high and 12 inches wide.

8 | If the gauge wheel is pressed firmly against the soil and the wavy coulters are firmly in the ground with the left and the right wavy coulter operating at the same depth, the machine is set properly.

If the gauge wheel does not turn or is not firmly on the ground, increase the air pressure by 5 psi and drive about 200 feet. Check the operating depth again.

9 | If 40 psi cannot be reached or if the pressure exceeds 40 psi, check the relief valve on the remote controlled regulator on the cart.

NOTE: If the gauge wheel is in contact with the soil the majority of the time, periodically leaving the soil is acceptable.

Check in average soils; avoid field headlands when setting the pressures. Monitor this throughout the fields.

Never exceed 40 psi of down pressure with the shallow tillage system. Most field conditions require 10-30 psi.

For best results, run a SoilWarrior® with coulters at speeds above 5 mph. Higher speeds require greater down force.

If equipped with a tilting toolbar, the toolbar can be tilted down to provide more depth of the right coulter. The toolbar can be tilted up to provide more depth of the left coulter. Ideal operating position is with both coulters operating at the same depth.

Planting can be done into the SoilWarrior® zones once the top of the berm dries off. In conditions where soil moisture is lower and weather is hot and dry, plant as soon as possible after zoning to produce good seed-to-soil contact and retain moisture in the zones.

In dry conditions, do not get too far ahead of the planter with SoilWarrior®.

IMPORTANT: *Damage from field operation in frozen ground or from sharp turns will void any and all warranties.*

7.2.6 SOILWARRIOR® X: DEPTH ADJUSTMENTS

1 | Adjust the toolbar tilt or hitch position to set the parallel links to the correct operating range.

If equipped with tilting toolbar, the back of the toolbar can be tilted down to provide more depth of the cog wheel. Adjust the tilt with the toolbar tilt stop on the right side of the machine and the tilt hydraulics.

- Clockwise rotation of the adjustment assembly will raise the back of the toolbar up.
- Counter clockwise will lower the back of the toolbar down.
- Cycle the toolbar tilt hydraulics to reset the tilt stop after the adjustment. When raising the back of toolbar, tilt the toolbar up slightly before adjusting the toolbar tilt stop.

2 | If not equipped with a tilting toolbar, adjust the position of the hitch.

NOTE: *Be sure after adjusting the toolbar tilt or the hitch position that the parallel links of the row units are below parallel. If the parallel links are above parallel, you are at severe risk of damage to the row unit in the event of an obstacle in the field.*

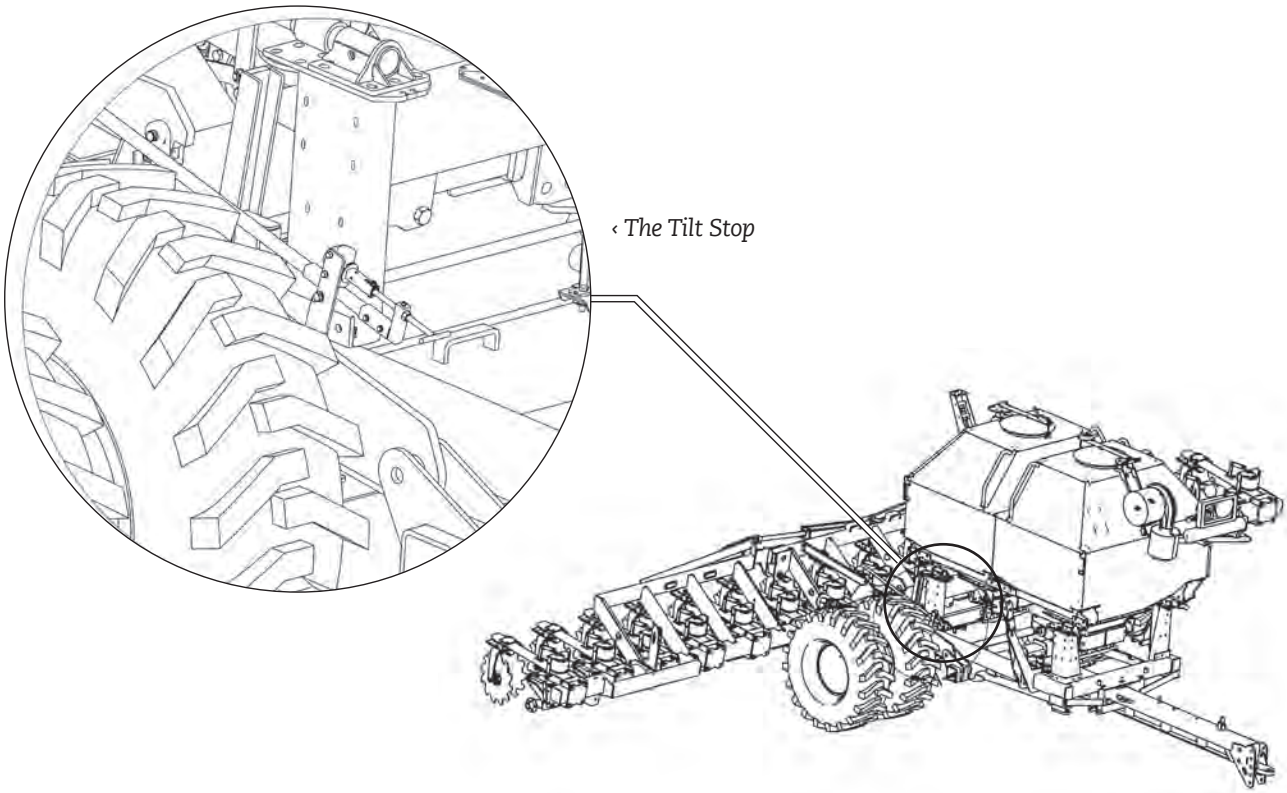

7.2.7 SOILWARRIOR® X: COULTER ADJUSTMENTS (DEEP AND SHALLOW)

1 | For gauge wheel adjustment, raise the machine out of the ground and engage the lift and tilt locks. Be sure that the locks are properly secured.

2 | To build a narrower berm, containment coulters can be adjusted with a slight camber. Place a shim on the outer two bolts of each containment coulter.

3 | Adjust the gauge wheel to the desired position (*refer to Section 7.3.3 for depth reference and adjustment procedure*).

4 | Lower the machine into the ground, operate for a distance of 200 feet, and check the zone depth.

5 | If the berm is lower than desired, adjust the containment coulters at a sharper angle so they roll soil in a tighter pattern. If the berm is taller than desired, straighten the coulters with the main coulter so less soil is rolled into the berm. Piling of residue and soil occurs if the containment coulters are set too tight for the conditions.

NOTE: All gauge wheels on a machine should be set at the same operating depth. You may want to operate the row units deeper if conditions allow removing additional compaction from the tramlines.

NOTE: Be sure that the cog wheel arm is not in contact with the ground so that it does not drag residue along and create piles. It's alright to adjust one or two rows at a time to ensure desired depth is achieved prior to repositioning all the rows. Throughout the adjustment process, verify the toolbar and hitch maintain proper positioning. One way to verify this is, to make sure the containment coulters maintain ground contact. Also, be sure that the toolbar is not tilted too far forward or the hitch position is so low that the containment coulters are not in contact with the ground.

Containment coulters mix and roll churning soil into a berm behind the cog wheel or the shallow tillage system.

In Deep Tillage Configuration:
Soil should be mounded about 2-5 inches above unworked ground and 12 inches wide with a flat top and no uneven ridges or trenches on the sides for seedbed preparations. For the deep tillage system with the cog wheel, they need to be set to contain the lumps, chunks of soil, and the fertilizer.

In Shallow Tillage Configuration:
Soil should be mounded about 2-5 inches above unworked ground and 12 inches wide with a flat top and no uneven ridges or trenches on the sides for seedbed preparations. If the berm is lower than desired adjust the containment coulters at a sharper angle so they roll soil in a tighter pattern. If the berm is taller than desired, straighten the coulters with the main coulter so less soil is rolled into the berm. Piling of reside and soil occurs if the coulters are set too tight for conditions. For the shallow tillage system, with the coulters, they need to be set to contain the lumps, chunks of soil, and the fertilizer.

7.2.8 SHALLOW TILLAGE CONTAINMENT COULTER ADJUSTMENT

See Section 7.3.5, #2 for proper containment coulter set up.

The containment coulters can be moved forward and backward as needed. By moving them forward, more of the soil is lifted by the coulters. This reduces the amount of black dirt in between the tilled zone. Moving them rearward allows more room from the rear of the working coulters and the containment coulters.

7.3 SOILWARRIOR® N: OVERVIEW AND OPERATING PROCEDURES

The SoilWarrior® N can be used in both phases of crop production for primary and secondary tillage. Depth adjustments can be made in one inch increments up to a depth of 6 inches with coulter-only and 10 inches with knife.

Unlike the SoilWarrior® X row unit, the tillage coulter of the SoilWarrior® N is linked together with the containment coulters. The containment coulters serve as the depth control device.

The bottom of the tillage coulter stays parallel with the bottom of the containment coulters throughout the 19 inches of vertical travel, thus creating an accurate control method throughout the range of travel. The amount of down pressure is controlled through the standard air bag assemblies that are mounted on each row unit.

The containment coulters can be angled independently and positioned behind the tillage coulters to create the style and type of zones that fits your soil type and condition.

The wavy coulters cut, fluff, and condition the soil into zones that are 8 inches wide with the coulter-only attachment (12 inches with the shank and knife attachment), and up to 5 inches above the unworked ground.

> ***NOTE:*** *Zone height and width vary on soil types, residue type and amount, speed, and moisture levels. Shallow tillage is recommended to be done at speeds above 5 mph. A higher speed creates more soil movement and generally produces a more functional soil berm and better seedbed. The best speed will be determined by terrain, soil type, soil moisture, residue amount, tractor horsepower, and operator experience.*

ETS Tillage Coulter Options for N Row Unit

ETS No.	Description	Wave No.	Height
2901	Coulter 0W20"	0	0.0"
3414	Coulter 8W18"	8	2.5"
3403	Coulter 8W20"	8	2.0"
6996	Coulter 8W20" Directional	8	2.0"
3411	Coulter 13W20"	13	1.0"
3412	Coulter 13W22"	13	1.0"
9731	Coulter 18W22" Vortex	18	1.25"
9735	Coulter 12W22" Vortex	12	1.25"

N Row Unit

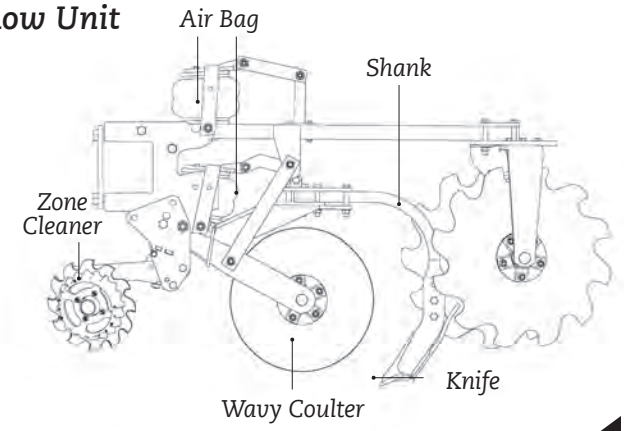

7.3.1 SOIL WARRIOR N: CONVERT FROM COULTER-ONLY TO SHANK-AND-KNIFE

1 | Fully unfold and lower the toolbar on to the lift stop and tilt the toolbar to allow access to the row units and set the toolbar lift lock.

2 | Relieve all down force air pressure.

3 | Place tractor transmission in park, stop engine, and remove key.

4 | Loosen (do not remove) the bolts and flange nuts on the top plate of the containment coulter assembly. Reposition the containment coulter assembly to a position approximately 2 inches from the end of the containment coulter tube. Re-tighten the four bolts evenly.

5 | Loosen the two outer bolts of the Containment coulter arms (4) and remove the inner bolt and nut.

6 | Place a ½ inch washer in between the top plate and the containment coulter arm on the inner bolt position.

7 | Set the containment coulter about 10 inches apart at the
narrowest point. This is needed to allow proper flow of soil and residue through the containment coulters.

8 | Remove the two bolts on the air bag equalizer mount bracket (2) and remove the spacer.

9 | Install the shank front mounting bolt washer and top lock flange nut.

10 | Reinstall the air bag equalizer mount bracket.

11 | Center the knife and shank to the center of the tillage coulter and tighten.

12 | When using shank extension kit, position containment coulter assembly closer to the end of the containment coulter tube.

13 | Set the fertilizer delivery tube about 1.5 inches behind the shank. Allow clearance for the NH3 or liquid tube if equipped.

SoilWarrior® N

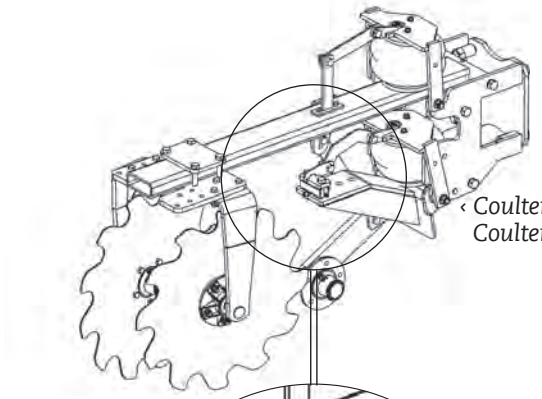

‹ *Coulter-only assembly.*
Coulter not shown for clarity.

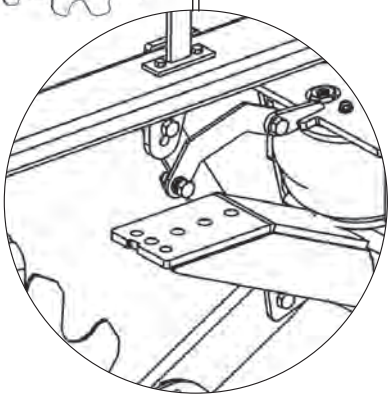

‹ *Prep for shank install*

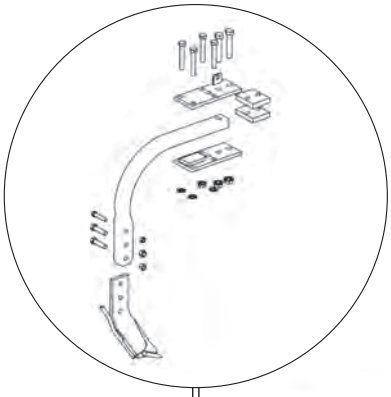

‹ *Shank assembly*

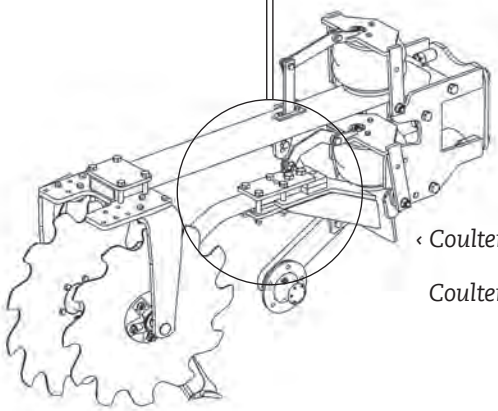

‹ *Coulter, shank, and knife assembly.*

Coulter not shown for clarity.

7.3.2 SOIL WARRIOR N: CONVERT FROM SHANK-AND-KNIFE TO COULTER-ONLY

To convert to coulter only, reverse the previous procedure, adjusting the fertilizer tube last.

7.3.3 SOIL WARRIOR N: STARTING FIELD OPERATION

1 | Position the containment coulter arm so that the containment coulters are 7 inches apart. A containment coulter that is set at too severe of an angle will create a trenching action on the containment coulter.

- In wet soil, straighten coulters to allow the soil to flow through.
- In drier soil conditions, narrow them to allow the soil to stand up taller in the zone.
- The berm will change from soil type and moisture so it is up to the operator to monitor their performance and adjust the coulters to best suit the existing conditions.

NOTE: For best performance, the containment coulters must be rotating at all times.

2 | For coulter-only, start with a down pressure of 40 psi when conditioning a fall zone and 50 psi when establishing a new zone in the spring.

3 | For shank and knife tillage, start with a down pressure of 50 psi when conditioning a fall zone and 60 psi when establishing a new zone in the spring.

4 | Load fertilizer system. Adjust and calibrate per instructions in Section 8.

5 | Once in the field, lower the row units and bring the tractor speed up to approximately 6 mph.

6 | Check the running depth after driving about 200 feet in the field at the suggested operating speed. Upon stopping, be aware that the position of the row units, toolbar, and cart will change. If possible have an assistant watch from a safe position during operation to assure correct operational settings. If equipped, you should have your toolbar-mounted camera adjusted so you can watch the row units at operating speeds.

7 | With coulter-only tillage, zones should be about 3–5 inches deep and mounded to create a berm about up to 5 inches high and 9 inches wide. Using the shank and knife assembly, zones should be up to 9 inches deep and mounded to create a berm about 2-5 inches high and 12 inches wide.

NOTE: The containment coulters should be in the soil less than 2 inches. Excess depth is not recommended.

8 | If the containment coulters do not turn or is not firmly in the ground, increase the air pressure by 5 psi and drive about 200 feet. Check the operating depth again.

NOTE: Air pressure should never exceed 80 psi. Most field conditions require 40 to 70 psi.

9 | If equipped with a tilting toolbar, the toolbar can be tilted down to provide more depth of the tillage coulter. The toolbar can be tilted up to provide less depth of the tillage coulter. Ideal operating position is when the desired coulter tillage is reached and the containment coulters are engaged preferably at 1.5 inches and no more than 3 inches. *Refer to Section 7.3.4.1 for correct depth adjustment procedures.*

10 | Adjust the tilt of the toolbar with the toolbar tilt stop on the right side of the machine and the tilt hydraulics. Clockwise rotation of the adjustment assembly will tilt the toolbar up. Counter clockwise will tilt the toolbar down. Cycle the toolbar tilt hydraulics to reset the tilt stop. When wanting to tilt the toolbar up, you must tilt the toolbar up slightly before adjusting the toolbar tilt stop. If not equipped with a tilting toolbar, adjust the position of the hitch.

NOTE: *If you adjust the depth link arm, be sure to adjust the fertilizer delivery tube to assure proper alignment. Moving the depth link arm will either position the fertilizer delivery tube into the coulter*
or too far away from the desired position.
The desired position of the delivery tube is approximately 1.5 inches away from the coulter in the raised position.

All row units on a machine should be set to the same operating depth. In the event of coulter diameter wear, adjust the link arm to a lower position to reach the desired tillage depth as with a new 20 inch coulter.

It is suggested to replace the 20 inch tillage coulter when it reaches a diameter of 17 inches.

NOTE: *Planting can be done into the SoilWarrior® N zones once the top of the berm dries off. In conditions where soil moisture is lower and weather is hot and dry, plant as soon as possible after zoning to produce good seed-to-soil contact and retain moisture in the zones.*

In dry conditions, do not get too far ahead of the planter with SoilWarrior® N.

OPERATOR'S NOTE: *SoilWarrior® N row units are not meant to penetrate ground that is very dry and extremely hard (more than 400 pounds on a Soil Compaction Tester.)*

The same holds true in extremely moist conditions. If the gauge wheels are balling up with soil and the containment coulters are throwing chunks of soil, wait for drier conditions.

IMPORTANT: *Damage from field operation in frozen ground or from sharp turns will void any and all warranties.*

11 | To adjust zone depth after air pressure adjustments have been made, changing the link arm position up or down one position will change the depth the 1 inch.

12 | When the operating depth is correct, check the size and shape of the soil berm. Soil should be mounded up to 5 inches above unworked ground. If the berm is lower, adjust the containment coulters at a sharper angle so they roll soil in a tighter pattern. If the berm is too tall, adjust the containment coulters straighter with the wavy coulters so less soil is rolled into the berm. Piling of residue and soil occurs if the containment coulters are set too tight for the conditions. As a suggestion, adjust one or two rows out of the tramlines first and test to see what the best setup for the conditions is.

13 | The containment coulters can also be adjusted with a slight camber by placing a ½ inch hardened flat washer on the inside bolt where the containment coulter arm attaches to the lower mount plate. Place the washer between the lower mount plate and the containment coulter arm. This will allow for more soil and residue to slough through the containment coulters. This will create a zone approximately 12" in width. Be sure to check for clearance on all coulters and coulter arms after making adjustments.

7.4 ATTACHING AND DETACHING WING SECTIONS ON 4500 SERIES UNIT

Detachable wing sections can be removed to match the tillage system to your tractor.

1 | Position the SoilWarrior® and tractor so that you have room to move forward at least 50 feet.

2 | Be sure that the area you are on is firm enough that the detachable wings do not sink into the soil.

3 | With the toolbar in transport position and the row unit air pressure at zero, position the detachable wing row units over center as if they were at the top of their up travel.

4 | Insert the row unit lockup pins in the holes below the lower parallel link on each wing row unit on the SoilWarrior® X.

5 | Unfold the toolbar and tilt the toolbar to a horizontal position. Turn the tilt stop rod complete out to allow the toolbar to tilt into the needed profile.

6 | Raise the toolbar to the fully-raised position and engage the toolbar lift locks.

7 | Insert the parking stands in the mounts on each wing section using the pins and clips supplied.

8 | Disconnect all the fertilizer placement lines that supply the wings from the main fertilizer system, and place the supply lines that were disconnected on the wing and secure.

9 | Disconnect the row unit airline that supplies the row units on the wings, and cap or connect the air supply line to the appropriate connection.

10 | Assure all the hardware and supply lines for the detachable wings are clear of the main section, and secure the removed hardware and fasteners for storage.

12 | Slowly lower the toolbar until the detachable wings front and rear parking stands are in contact with the ground.

13 | Loosen and remove the 1 inch bolts and nuts on the wing plates.

14 | Raise the SoilWarrior® Toolbar. Drive the unit forward until it is clear of the detached wings.

15 | Position the detached wings and row units in a safe area for storage. Some toolbar sections have pallet fork pockets to aide in the transport of the detached wing and row units.

For installing the wings, position the wing section close to the unit for easy alignment and reverse the previous steps.

For dry fertilizer systems, ensure that the internal block-out plates are installed or removed on the affected rows. This depends on the application. For example, rows not in use must have internal block plates installed on the effected meter rolls and caps installed onto the air distribution lines not being used.

Air distribution lines must be removed from the fan distributor and caps placed on both sides of each run on both collector bottoms. Caps should also be placed on the empty fan distributor openings. To add lines back into the system, reverse the process.

> **NOTE:** *If adding lines into the fertilizer distribution system, make certain the internal block-out plates are removed on the respective runs.*

The fan outlets must match the meter runs used. In the event that an airline from the fan to the meter collector bottom is left connected and the meter block-off plate is installed, fertilizer will be siphoned though the meter rolls of the connected meter runs when the unit is stopped and the fan is running.

For liquid fertilizer systems, be sure to cap the disconnected section or reconnect the lines on the wings that were attached.

8 NUTRIENT DELIVERY SYSTEMS

ETS nutrient delivery systems include dry (granular) fertilizer, liquid (non-suspension) fertilizer, and NH3.

The ETS dry fertilizer systems are a pressurized tank system. Each tank is manufactured to meet the requirements of the method of metering. The metering system has the ability to accurately apply a wide variety of materials to meet the desired rate of delivery and placement.

The maximum weight will vary based on the product density. To start with your first load, consider ordering 80% of suggested pounds of your products density to get an idea of what your fertilizer blend actually weighs and area required to hold this amount.

ETS Cart, Fertilizer Systems, and Capacities

DRY GRANULAR FERTILIZER					
ETS CART	No. of Tank(s)	Capacity (cubic ft.)	Capacity per Tank (cubic ft.)	Capacity (bushels)	Capacity (lbs.) *Based on product density 58 lbs per cubic ft.*
Standard	1	160	160	130	9,280
HD	2	320	160	260	18,560
XL	2	400	200	320	23,200
	3	415	160-75-160	334	24,070

LIQUID FERTILIZER			
ETS CART	Liquid Tank	Capacity (gallons)	Capacity (lbs.) *Based on weight of UAN 28*
Standard	1	1,250	13,350
HD	1	1,600	17,100
	1	2,200	23,500
	2	300 each	6,200
XL	1	2,200	23,500

Dry Granular System

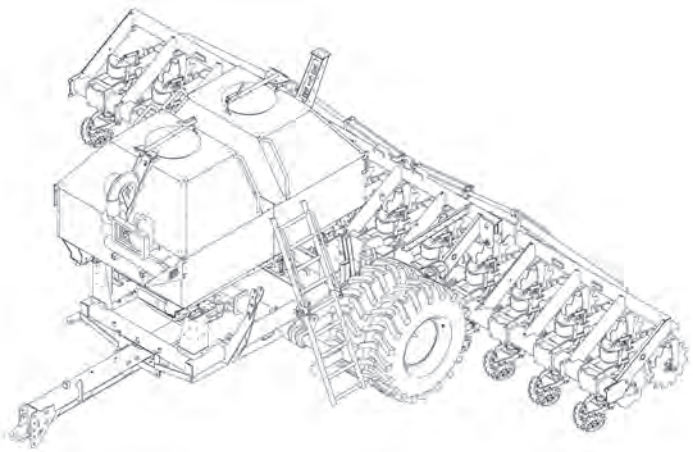

Liquid Fertilizer System

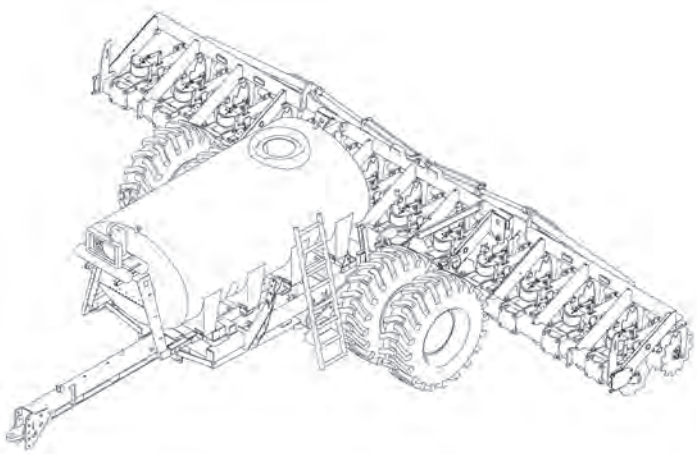

Product Density Using the Dry Fertilizer System

Product	Analysis	Density ft^3 *approx.*
DAP	18-46-00	59
MAP	11-52-00	58
Soft Rock Phosphate	0-05-0	78
Potash	0-0-60	65
Potassium Sulfate	0-0-50	80
Ammonium Sulfate	21-0-0-26S	58
Urea	46-0-0	46
ESN	44-0-0	46
Soybeans		47.5
Rye		45

It is important to test each load for density. Most computer generated densities from the fertilizer plants are off several pounds. A product density meter is in the toolbox of every dry system delivered by ETS.

Each meter can be split for the delivery to two rows of zonal placement.

8.1.1 DRY SYSTEM: INSPECT AND SERVICE METER ROLLS

Take the time to inspect the meter rolls throughout the season, or if the desired rate is not being achieved. If the tank is empty, open up the clean-out door and inspect the meter rolls. If there is product in the tank and the meter rolls need inspection or service, use the following procedure to stop the flow of fertilizer.

1 | Place tractor in park, shut off engine, and remove key.

2 | Remove two 5/16 inch flange nuts (1) from the slide gate slot access T-bar.

3 | Insert fertilizer shutoff slide gate completely into the slot behind the T-bar. The angle bracket on the gate must be upward.

4 | Remove meter roll access door (2).
- Some dry fertilizer will spill out when door is removed.
- Use the meter calibration bag to catch the fertilizer, if desired.

5 | Inspect the meter rolls for possible replacement, plugging, or blockage.
- Use the manual override function of the Pulse-Width Modulation (PWM) to rotate the meter roll.
- Rotate the meter rolls 360° during inspection to check all flutes.

6 | Remove the collector bottom insert and the rear access door on the meter body to ensure there is no blockage.

7 | Meter shaft should turn with minimal resistance.

8 | Reinstall the meter access door.

9 | Remove the fertilizer shutoff slide gate.

10 | Reinstall the slide gate slot access T-bar.

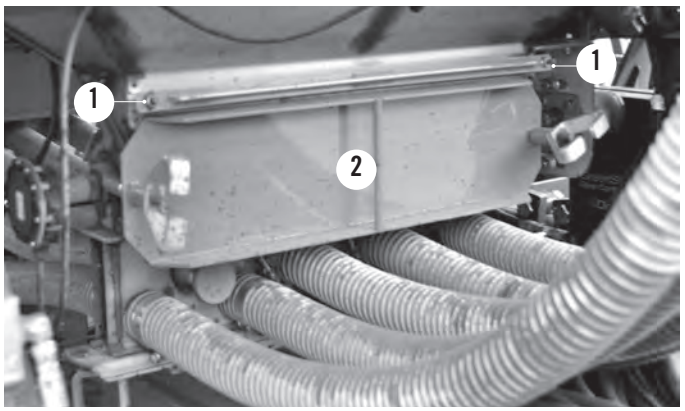

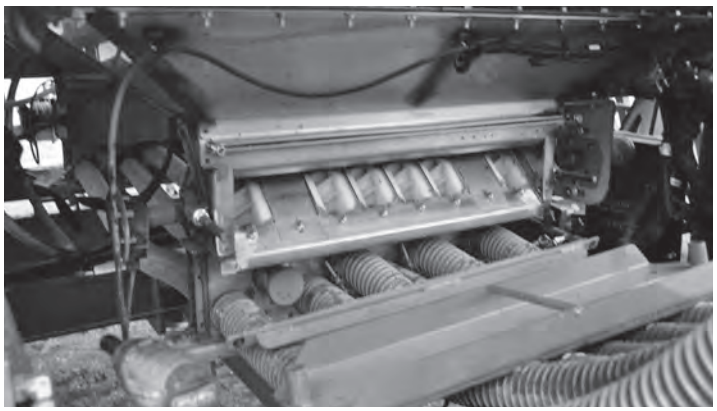

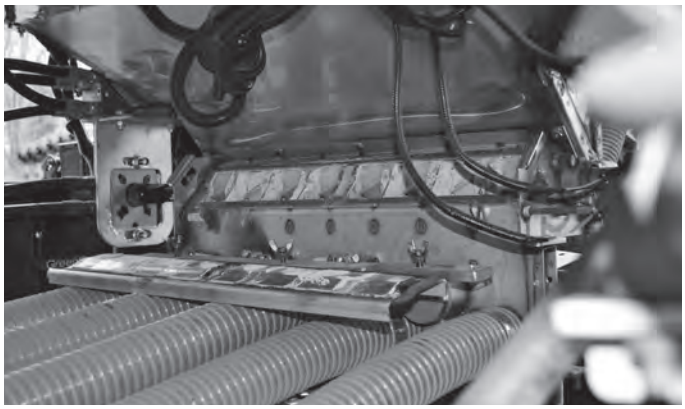

TOP: Meter roll with access door attached
BOTTOM: Meter roll rear access door removed

TOP: Meter roll with access door removed
BOTTOM: Meter roll collector bottom insert

8.1.2 DRY SYSTEM: SCALE CALIBRATION SETTINGS

This is a condensed excerpt from the Weigh-Tronix Manual. See manual for more information.

1 | From the G/N mode, Press and hold Hold/Menu key until three beeps are heard then release.

2 | Set.Pas will be displayed.

3 | Use the numeric entry procedure to enter the password 640.

NUMERIC ENTRY PROCEDURE

M+ ▼ — *Press this key to enter a value on the screen and increment the value being entered.*

HOLD MENU — *Press this key to decrement the numeric value being entered.*

RM ▲ — *Press this key to move the numeric entry cursor one position to the right.*

Enter 640 by using RM and M+ key to enter numbers and Hold Menu key to go to next number.

4 | When 640 is programed press Print/Select key.

5 | Press Print/Select key once more... CONFIG is displayed.

6 | Press Print/Select key again.

7 | Press RM or M+ key to select number and Hold Menu key to move on to next number.

8 | Configuration Code Number (CCN) to put in is 09300.

9 | When all numbers have been added press Print Select - CONFIG will be displayed

10 | Press G/N key twice.

11 | Screen will say busy and reset system.

12 | Press Zero Clear to clear weight and reset scale.

Weigh-Tronix 640XL scale display

8.1.3 DRY SYSTEM: CALIBRATION PRE-FILL RECOMMENDATIONS

The fertilizer rate must be calibrated at the start of the season and when changing products. Use the following recommendations to calibrate the fertilizer application rates.

1 | Use a flexible tube approximately 24 inches long and with the diameter of the tenders fill an auger. This allows an effective way to transfer product from the tender to SoilWarrior's® dry tanks.

- SoilWarrior's® dry tank is approximately 12 feet to the top of the tank. Be sure the tender's auger has 14 feet of vertical and horizontal length from tender's rear bumper to reach each tank with the flexible tube attached to the auger.
- Most fertilizer companies do not have flexible tubes on the tenders, and some are not the correct height and length. Pre-plan to assure a smooth activity.

2 | Position the tender at about a 10 degree angle of the toolbar to reduce possible interference with the toolbar wing wheel assemblies.

3 | Ensure the tank's fill screens are in place.

- Debris in the system can make it difficult to operate.
- Let the fertilizer supplier know that the product is going through a fluted metering roll system and that they need to take caution in the quality of the product. Ask the supplier to minimize the amount of fine particles as best as they can.
- If possible, request screens with holes of less than 1 inch diameter within their system. If not available, be sure that the fertilizer tender and SoilWarrior® have screens in them.

8.1.4 DRY SYSTEM: LOADING FERTILIZER

1 | Connect the SoilWarrior® to the tractor (*see Section 5.1, Transportation).*

2 | Unfold the machine.

3 | Place tractor transmission in park, stop engine, and remove key.

4 | Fold the ladder up to access the fertilizer tank.

- Ensure the folding ladder latch is engaged so that the ladder does not fold down while climbing to the tanks.
- If the machine is equipped with a folding toolbar, fold down the ladder after each use and before folding the toolbar. The ladder can be damaged if this is not done prior to folding the toolbar for transport.

5 | Open tank lids.

- For safety, do not lift the lids vertically, but swing them to the side to access the tanks. Follow the arrows on the lid mounts.

6 | Insert flex tube in a tank.

- Be sure that the tank screens are in place and clear of obstructions.

7 | Fill each tank with product, and record weight after each filling.

8 | Stop the flow to the tender's auger in time to clear the auger of product for transport.

9 | Wipe off the rubber seals on top of tanks to assure a good seal.

- Make sure the seals are seated correctly on the tank before closing lid.
- Improperly installing seals will allow air to escape, causing an incorrect fertilizer apply rate.

10 | Carefully climb down the ladder, and then fold down and secure the ladder in place.

11 | Move the tender away from the machine.

8.1.5 DRY SYSTEM: PWM BLOCK

The PWM block controls hydraulic flow to the fertilizer drive motors.

When setting the hydraulic flow to this valve at the tractor, set the constant flow to approximately 20% flow on most tractors, or 5.0 on a John Deere tractor. During calibration, you may need to adjust the flow slightly. It is advised that you don't send more than 40%, or 6.5 (John Deere), flow to this valve.

The T port of this valve has a check valve to prevent reverse flow in the system. DO NOT remove the check valve. Fluid flow in reverse will damage the solenoids.

Most ETS units will have the Air Compressor (AC) connected to the Return Port T to operate the hydraulic motor on the AC. This reduces the required SCVs of the tractor. *Refer to Section 5.2 for correct connections.*

PWM Block

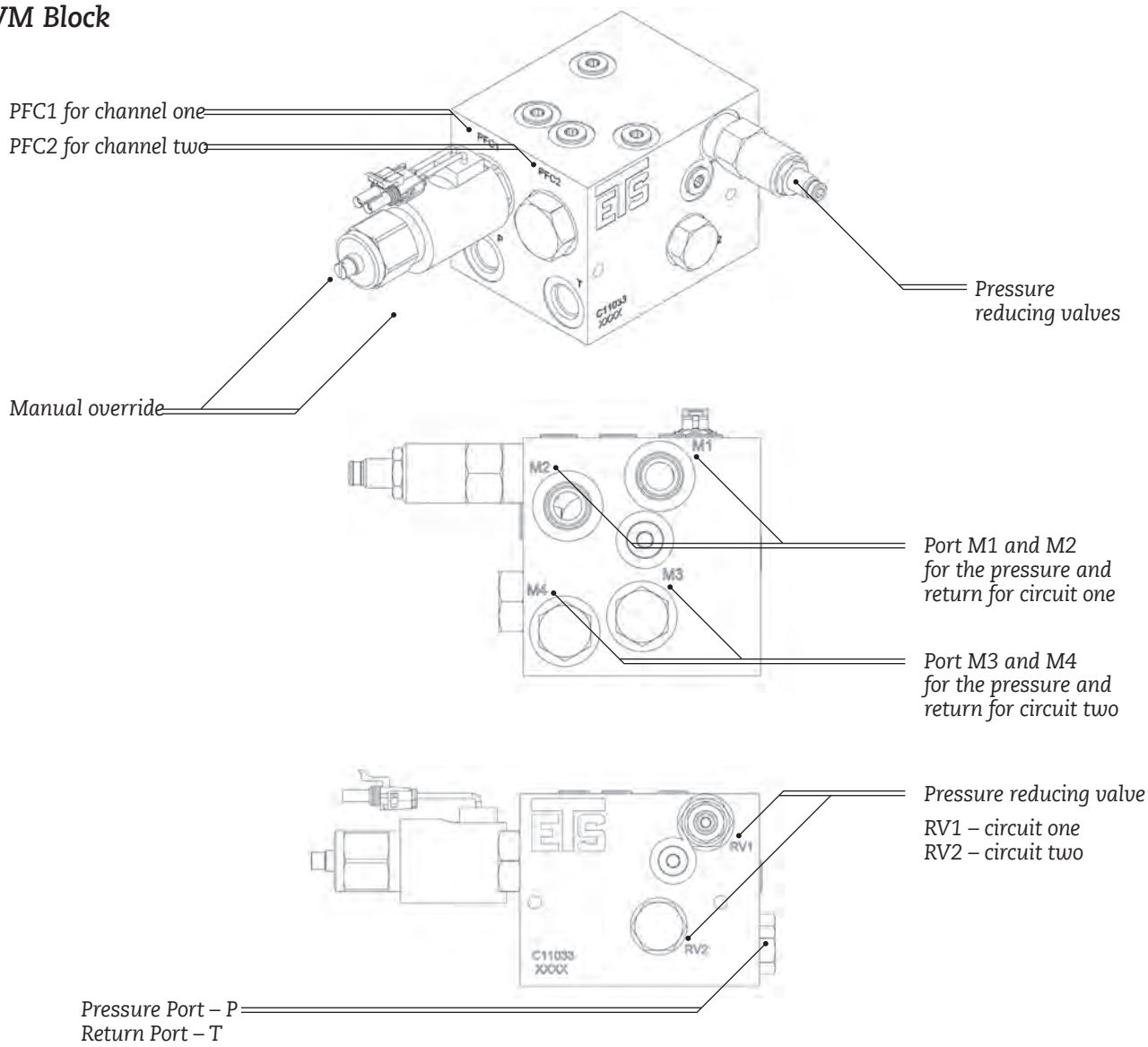

8.1.6 DRY SYSTEM: PWM MANUAL OVERRIDE

Use manual override to clean and service meter rolls. Turning the screw on proportional flow control (PFC) manual override clockwise opens the valve to provide flow to meter drive motors. The further turned, the faster the motor will rotate. When service is complete, rotate the PFC manual override screw counterclockwise to its end stop to assure the manual override is deactivated.

NOTE: If manual override is not completely deactivated, it will affect performance.

8.1.7 DRY SYSTEM: PWM PRESSURE REDUCTION VALVE ADJUSTMENT

Adjustable hydraulic pressure reduction valves are located on each circuit of the PWM (RV1 and RV2.) Valves may need to be adjusted due to inconsistent meter roll shaft rotation. These valves protect meter rolls from damage.

Factory settings:

- 8-run meter bodies = 5 turns in (clockwise from the fully retracted end stop)
- 12-run meter bodies = 7 turns in (clockwise from the fully retracted end stop)

Before making adjustments, check the system for a plugged run or meter roll. Inconsistent shaft rotation may be caused by drag of fertilizer within the system. Adjust by turning pressure reduction valve inward one turn at a time. Operate the unit for 50 acres to determine if the problem has been corrected.

Making more than 2 turns may indicate another factor is affecting the shaft rotation. Turning up the flow from the tractor will not correct the inconsistent shaft rotation issue.

NOTE: When switching from heavy density to lighter density fertilizer, reset the pressure reduction valve to factory settings.

NOTE: Drive motors are connected to the meter rolls via a ¼" grade 5 bolts with a lock nut. It is recommended to change this bolt at the start of each season.

8.1.8 DRY SYSTEM: APPLICATION RATE SENSOR

The application rate sensor is mounted on the opposite side of the meter roll drive motor. This sensing technology will alert you if there is a problem and the drive has stopped operating. All ETS systems can also be outfitted with electronic fertilizer run block systems to alert you to a flow issue. *Run block system information is in Section 8.1.16, Dry System: PDC Run Block System.*

8.1.9 DRY SYSTEM: HYDRAULIC FLOW

The hydraulic flow of most ETS dry fertilizer systems:

SCV pressure from tractor. *(Set the flow rate at about 20% flow or 6.0 on a John Deere).*

Through the non-bypass filter.

PWM block – P port.

Up to two circuits per block to control drive motors. If you have three tanks, a second PWM will be mounted on the rear tank. The T line from PWM one will go to the P port of this block. The T line will then go to the AC.

Return from block is out of port T.

Most systems, this line will go to the AC in port.

Through the AC and then back to the return SCV of the tractor.

IMPORTANT: *As with any hydraulic motor circuit, always place the SCV in the float position whenever you shut the flow off. This reduces the possibility of a seal issue with the motors and PWM. Be sure that the case drive line is connected to the appropriate port on the tractor which has zero back pressure.*

IMPORTANT: *All ETS AC systems have a case drain. Be sure that the case drive line is connected to the appropriate port on the tractor which has zero back pressure.*

IMPORTANT: *If you connect the case drain line to a SCV or Power beyond return, the motor seals will fail. This type of damage voids warranty.*

8.1.10 DRY SYSTEM: CALIBRATION SETTINGS AND METER ROLL SELECTION

Cubic Feet per Revolution (CFR) Settings for Ag Leader and John Deere Systems

No. of Rolls	Roll Size 7	Roll Size 10
1	0.005	0.006
2	0.009	0.013
3	0.014	0.019
4	0.018	0.026
6	0.028	0.039
8	0.037	0.051
12	0.055	0.077

For calibrating other dry fertilizer systems, refer to system manual.

NOTE: *Prior to filling with fertilizer, be sure to operate the drives with the monitor and assure PWM calibration process has been completed. Refer to monitor operator manual for process.*

ETS Dry Fertilizer Meter Roll Selection *(all values are per tank)*

Meter Roll Size	Meter Roll Width	Shim Usage (quantity)	Rate Per Acre Range	Slider Usage	Chain Reduction Usage Required
7	1.75 in.	(2) .625	25–175 lbs	Products less than 50 lbs/ft	Less than 75 lbs/acre
10	2.5 in.	(1) .50	75–400 lbs	Always	Less than 125 lbs/acre

8.1.11 DRY SYSTEM: PREPARING TO CALIBRATE

1 | Fill tank(s) with fertilizer.

2 | Remove the collector bottom insert and check for fertilizer flow on the tank to be calibrated by using the manual override procedure *(Section 8.1.6)*.

> **NOTE:** *Remove collector bottom insert evenly to prevent damage.*

3 | Before attempting meter bag calibration, prime each meter body and set the hydraulic flow of the tractor and the control system.

4 | Attach meter calibration bag by tightening the cord of the bag around to the bottom of the collector.

5 | Calibrate the meters delivery rate by collecting at least 20 pounds of fertilizer into the meter calibration bag and weighing it. Because larger volume aids in calibration accuracy, be certain to collect a large enough sample.

6 | It is important to know the density of each blend or product in the bins. With the use of the fertilizer density meter and scale in the toolbox, determine the density of the product at each point of calibration. The density that is supplied on your bill of lading is sometimes inaccurate. To minimize the misapplication of your product, it is advised to check each time you calibrate or change blends or product.

7 | It's now time to calibrate the drive system according to the appropriate system user manual.

> **NOTE:** *When calibration is finished, place the collector bottoms back in original location*

Meter calibration bag attached to collector bottom

8.1.12 DRY SYSTEM: BEST PRACTICES WHEN CALIBRATING

- When priming meters, watch to ensure product is flowing from all open runs before starting calibration procedure.
- Perform calibration procedures at least twice to improve accuracy.
- If the CFR values differ from chart, make sure product is flowing from all open runs on meter body.
- When calibration is complete, save it in your monitoring system. Compare that information to your scale weight — this will ensure calibration is accurate.

  If inaccurate, adjust the pounds of product density to correct. Do not adjust CFR.

NOTE: When changing product density, be sure to adjust to match the applied blend.

8.1.13 DRY SYSTEM: TROUBLESHOOTING FERTILIZER FLOW

If product rates are inaccurate use these steps to troubleshoot:

1 | Check product delivery to each row.

a. Check for air flow to each row. If no air flow, check for plugged lines.

b. Activate the PFC manual override. Turn off after 15 seconds. Walk by each row to determine the flow of product to each row. If a row does not have flow, inspect meter roll.

c. Pull forward ten feet and repeat test for each tank.

d. If a flow issue is determined on a meter body, open the back of each meter body to assure product flow is even across all runs and that the flow is clear to the 2.5 inch hose.

e. With the rear door open, rotate the meter with the manual override to determine if product is flowing freely into and out of each meter roll.

f. If product flow is not achieved by rotating the meter rolls, open the meter door.

2 | Inspect meter roll flow.

a. Remove two 5/16 inch flange nuts (1) from the slide gate slot access.

b. Insert fertilizer shutoff slide gate completely into slot. The angle on fertilizer shutoff slide gate must be upward. If facing down the meter roll access door can't be removed.

c. Remove meter roll access door to gain access to the meter rolls. Use the meter calibration bag to catch fertilizer that may spill.

NOTE: Reposition slide gate if fertilizer continues to flow.

d. Clear all fertilizer from the meter rolls. Rotate meters with PFC manual override to ensure all product is removed. Be sure the collector bottom insert is removed so that the fertilizer can exit the collector bottom.

e. Inspect the meter body and collector bottom to assure there is not a blockage.

f. Re-install components and remove slide gate to prepare for operation.

NOTE: Inconsistent meter roll shaft rotation may be caused by using application rates below specification (see chart in Section 8.1.10).

8.1.14 DRY SYSTEM: FAN SPEED AND WATER COLUMN SETTINGS

The fan speed sensor is located within the fan screen. The speed sensor output has two pulses per revolution. Use this when setting up the monitor.

The chart below illustrates suggested RPM settings for field operation. Most monitors have the ability to read a fan speed sensor. Some systems can only read one sensor. If your unit has only one sensor and two fans, be sure to match the water column of the fan that does not have a sensor to the fan with a sensor.

> ***NOTE:*** *Matching the hydraulic flow between the two fans does not assure the same fan water column or RPM.*

> ***IMPORTANT:*** *The ¾ inch hydraulic lines are for the fan(s). When operating the fertilizer fan, be sure to have the SCV lever in the forward position. This is necessary for two reasons:*
>
> *1) When you shutoff the fan, the flow must go to float to stop flow to the fan to minimize the fluid hammer of stopping the hydraulic flow.*
>
> *2) All other functions of the SoilWarrior® are designed so that in field operations of the SCV, levers go forward.*

If the tractor has two hydraulic pumps, connect the fans to the pump with higher capacity.

> ***NOTE:*** *Each fan requires approximately 13 GPM.*

Start the fans at an SCV flow of less than 50% (6.0 John Deere). The fan should rotate clockwise. The overrun valve on the fan hydraulic circuit prevents the fan motor from running backward.

> ***NOTE:*** *Do not remove the check valve from the fan hydraulic circuit. Removing will damage the fan.*

Periodically check fan blades and screen are clean of debris. Remove any debris. Debris build-up may cause fan to vibrate excessively.

POTENTIAL CAUSES OF FLOW PROBLEMS

- *Pell Lime*
- *Spring blends of Urea and AMS*
- *Rate/Acre*
- *Fines*
- *Liquid Additives*
- *Poultry Litter*
- *Fan Speed*
- *Water in lines*
- *Doors not tight*
- *Lid not locked*
- *Travel*
- *CFR value incorrect*
- *Wet Product*
- *Running w/o Fan on Low Fan Speed*
- *Plugged RU Tubes*

Fan Speeds and Water Column Settings

Unit	Fan Speed (RPM)	Water Column (without product) in H_2O	Water Column (with product)
less than/equal to 6 row units & PlotWarrior	less than 3,000	less than 17	less than 20
less than/equal to 12 row units	less than 4,500	less than 20	less than 30
greater than 16 row units	greater than 4,500	less than 25	less than 35

8.1.15 DRY SYSTEM: FERTILIZER TUBE PLACEMENT FOR DRY OR LIQUID FERTILIZER

ETS offers 6 tillage attachments with the two row units offered. *See chart for proper fertilizer tube placement.*

Fertilizer Tube Placement

Row Unit	Attachment	Placement
SOILWARRIOR® X	XD – Cog Wheel	2 inches behind cog wheel
	XS – Dual Coulter	Fertilizer Tube as forward as possible
	XS TR – Dual Coulter with Twin Row option	Fertilizer Tube as forward as possible
SOILWARRIOR® N	Coulter only	2 inches behind coulter
	Coulter with Shank and Knife	2 inches behind the NH3 or Liquid Hoses if installed. 2 inches behind the Shank.
	Twin Till	Fertilizer Tube as forward as possible

NOTE: *In some conditions, the use of a 6–8 inch tube extension may be added to place the fertilizer deeper into the zone. The use of this extension tube will concentrate the fertilizer more in to a band in the soil.*

8.1.16 DRY SYSTEM: PDC RUN BLOCK SYSTEM

The SoilWarrior® dry fertilizer system can be equipped with a flow blockage system. ETS uses the Intelliag PDC system from DICKEY-john. This system will monitor the flow of fertilizer to each row after the diffuser.

At startup, you will need to program the PDC to match your monitor. Below is a condensed process for initial setup. *Refer to the DICKEY-john manual for full configuration details.*

1 | Set speed to manual at 6 mph. This does not control drives, so the system only needs a manual speed entered. With some systems, you can select CAN speed if you have a GPS speed available.

2 | Set the system to monitor the correct amount of rows.

3 | Use the sensor detach mode to assure each row is detected.

4 | Turn each row to be monitored on to blockage instead of population count.

5 | Default rate is set to 2 particles per second. When applying a rate less than 50 lbs per acre, set the rate to 1 particle per 5 seconds.

NOTE: *If using John Deere technology, select fertilizer on the 2630 screen.*

8.2.1 LIQUID SYSTEM: INSPECT AND SERVICE SYSTEM

When using the unit for tillage only, remove nozzles and plug to prevent lines from filling with debris.

Flush out system with water. Clean screens and control panel. Wash machine to prevent corrosion of valves and hydraulic fittings.

If storing for winter months, run RV anti-freeze through the lines to protect from freezing.

- 8 row machines require 6 gallons
- 12 and 16 row machines require 12 gallons
- 24 row machines require 15 gallons

8.2.2 LIQUID SYSTEM: OPERATION

1 | Make sure there is liquid product in the tank before operating.

2 | Make sure the product supply valve is open to allow flow to the pump.

3 | Check pressure gauge for pump pressure.

4 | On each pump, there is an output tee in place with a ¼ turn valve in the agitation line. Make sure this valve is not completely closed — it will need to be adjusted when setting line pressure.

5 | On front of panel, make sure that all drains are closed and that all system lines are connected correctly.

6 | Turn on hydraulic pump. The pump should not exceed 15 percent flow. Watch the hydraulic pump pressure gauge. Start the system at 50 psi. Pressure is regulated by hydraulic flow and bypass valve setting.

7 | Use water to flush and test the system prior to use. ETS recommends running between 15–30 psi line pressures.

8 | If line pressure is less than 15 psi, increase hydraulic pump speed.

NOTE: Closing the agitation valve in small increments will cause more product to flow into the valves.

8.2.3 LIQUID SYSTEM: NOZZLE SELECTION AND MONITORING SYSTEM

*Nozzle Selection**

Nozzle No.	PSI	GPM per Nozzle in Water	Recommended Visagage II Ball Size	4 MPH	6 MPH	8 MPH	10 MPH	12 MPH
4	10	0.20	Black Plastic	9.9	6.6	5.0	4.0	3.3
	20	0.28	Blue Plastic	13.9	9.2	6.9	5.5	4.6
	30	0.35	Blue Plastic	17.3	11.6	8.7	6.9	5.8
6	10	0.30	Blue Plastic	14.9	9.9	7.4	5.9	5.0
	20	0.42	Blue Glass	20.8	13.9	10.4	8.3	6.9
	30	0.52	Blue Glass	25.7	17.2	12.9	10.3	8.6
8	10	0.40	Blue Plastic	19.8	13.2	9.9	7.9	6.6
	20	0.57	Blue Glass	28.2	18.8	14.1	11.3	9.4
	30	0.69	Blue Glass	34.2	22.8	17.1	13.7	11.4
10	10	0.50	Blue Glass	24.8	16.5	12.4	9.9	8.3
	20	0.71	Blue Glass	35.1	23.4	17.6	14.1	11.7
	30	0.87	S.S. Ball	43.1	28.7	21.5	17.2	14.4
15	10	0.75	Blue Glass	37.1	24.8	18.6	14.9	12.4
	20	1.06	S.S. Ball	52.5	35.0	26.2	21.0	17.5
	30	1.30	S.S. Ball	64.4	42.9	32.2	25.7	21.5
20	10	1.00	S.S. Ball	49.5	33.0	24.8	19.8	16.5
	20	1.41	S.S. Ball	69.8	46.5	34.9	27.9	23.3
	30	1.73	S.S. Ball	85.6	57.1	42.8	34.3	28.5
30	10	1.50	S.S. Ball	74.3	49.5	37.1	29.7	24.8
	20	2.12	S.S. Ball	104.9	70.0	52.5	42.0	35.0
	30	2.60	S.S. Ball	128.7	85.8	64.4	51.5	42.9
40	10	2.00	S.S. Ball	99.0	66.0	49.5	39.6	33.0
	20	2.83	S.S. Ball	140.1	93.4	70.0	56.0	46.7
	30	3.46	Out of Range	171.3	114.2	85.6	68.5	57.1

* TeeJet nozzles and CDS John Blue VisaGage monitoring balls are standard on ETS liquid systems. Operators who choose to use other brands should refer to the manufacturer's information for proper sizing and usage. Copies of TeeJet and CDS John Blue VisaGage operating materials are provided with each unit.

* Gallons per acre of water – 30" spacing

Since all tabulations computed are based on spraying water, which weighs 8.34 lbs per USA gallon (1 kilogram per liter) conversion factors must be used when spraying liquids that are heavier or lighter than water. To determine the proper size nozzle for the liquid to be sprayed, first multiply the desired GPM or GPA of liquid by the water rate conversion factor. Then use the new converted GPM or GPA rate to select the proper size nozzle.

Example:
Desired application rate is 20 GPA of 28% N.
Determine the correct nozzle size as follows:

› *GPA (liquid other than water) x Conversion Factor = GPA*
› *20 GPA (28%) x 1.13 = 22.6 GPA (water)*

Users should choose a nozzle size that will supply 22.6 GPA of water at the desired pressure and speed. The recommended pressure range is 15–30 psi.

To calculate a specific product's GPM rate, multiply GPM per Nozzle in Water rate in chart to the right by the appropriate conversion rate based on product weight.

Weight/Gallon	Specific Gravity of Water	Conversion
8.34	1.00	1.00
9	1.08	1.04
10	1.20	1.10
10.65	1.28	1.13

9.1.1 ROUTINE MAINTENANCE: LUBRICATION

The SoilWarrior® is designed so the grease fittings are accessible while the machine is in the transport position. Verify that the toolbar raise/lower locks and the toolbar tilt locks are engaged before entering the area under or behind the machine.

There is not a grease label by all five grease fittings on the SoilWarrior® X row units. Remember to lube the five points on the SoilWarrior® X row unit. The SoilWarrior® N row unit has two points, which are labeled.

Lubricate all grease fittings every 250 acres on units 12 rows and smaller and 500 acres on units 16 rows and larger.

IMPORTANT: *During Warranty period, you must use Schaeffer Gear lube in all hubs.*

9.1.2 ROUTINE MAINTENANCE: FERTILIZER FAN DRIVE MOTOR SEAL INSPECTION

Remove one fertilizer air tube from bin and check for an oily residue inside air tube. If an oily residue is present, this indicates that the fan drive motor seal is leaking and must be repaired or replaced.

9.1.3 ROUTINE MAINTENANCE: SERVICE REMOTE-CONTROLLED REGULATOR

1 | Place tractor transmission in park, stop engine, and remove key. Chock tires.

2 | Relieve the air pressure from the row unit down force system.

3 | Remove regulator cap.

4 | Remove O-Ring, spring, U-cup seal, and piston.

5 | Clean and inspect spring, piston, and piston O-Ring. Use a cotton swab to clean the regulator.

6 | Lubricate piston and O-Rings with Parker O-Lube (in toolbox).

7 | Remove snap ring from bottom of regulator.

8 | Remove cover under the snap ring which contains the bottom piston.

9 | Remove the top piston, bottom piston, and O-Rings. Clean and lube with Parker O-Lube. Be sure to clean the interior of piston.

10 | Assemble regulator.

9.1.4 ROUTINE MAINTENANCE: SHALLOW TILLAGE AND CONTAINMENT COULTER HUB BEARING AND SEAL REPLACEMENT

1 | Unfold and lower toolbar.

2 | Tilt onto the lift and tilt locks.

3 | Place tractor transmission in park, stop engine, and remove key.

4 | Relieve air pressure from the row unit down force system.

5 | Remove bolts, nuts, and coulter from hub.

6 | Remove six 8/32 x ½ inch socket head bolts (1) and hub cap from hub (2).

7 | Inspect the O-Ring (3) on the hub cap for quality.

8 | Remove the spindle cotter pin (4), castle nut (5), washer, (6) and outer bearing (7).

9 | Remove hub from spindle. The hub will come off the spindle relatively hard due to the oil seal.

10 | Remove the seal (8) and inner bearing (9) from hub. Discard the seal.

11 | Clean and inspect bearings, bearing cups, hub, and spindle.

- Replace any parts that are damaged or worn.
- If a bearing or bearing cup must be replaced, replace both bearings and bearing cups.
- Do not install a new bearing in a used bearing cup.
- Use a press and correct size drivers to remove and install bearing cups in hub.

12 | Install inner bearing (9).

13 | Install new seal (8) with flat side facing up, away from the hub with a press and seal installation tool.

14 | Place hub on spindle.

15 | Add two ounces of Schaeffer 75–90 Gear Lube into hub.

16 | Install outer bearing (7), washer (6), and castle nut (5).

17 | Tighten castle nut to 50 foot-pounds of torque.

18 | Loosen castle nut ½ turn, then tighten to 140 inch-pounds of torque.

- Tighten castle nut if necessary to align hole in spindle and install cotter pin.
- Bend open end of cotter pin.
- Be sure that the cotter pin does not interfere with the hub cap.

19 | Install new O-Ring on hub cap. Apply anti-seize to hubcap face and install with six socket head screws.

20 | Tighten hubcap bolts firmly.

21 | Remove plug (10). Rotate the bottom of the plug hole to a 3 o'clock position. Check fluid level. Add if necessary.

22 | Install plug. Rotate hub and check for free movement. The hub may rotate hard due to the type of seal and torque specs.

23 | Install coulter, bolts, and nuts to the hub side.

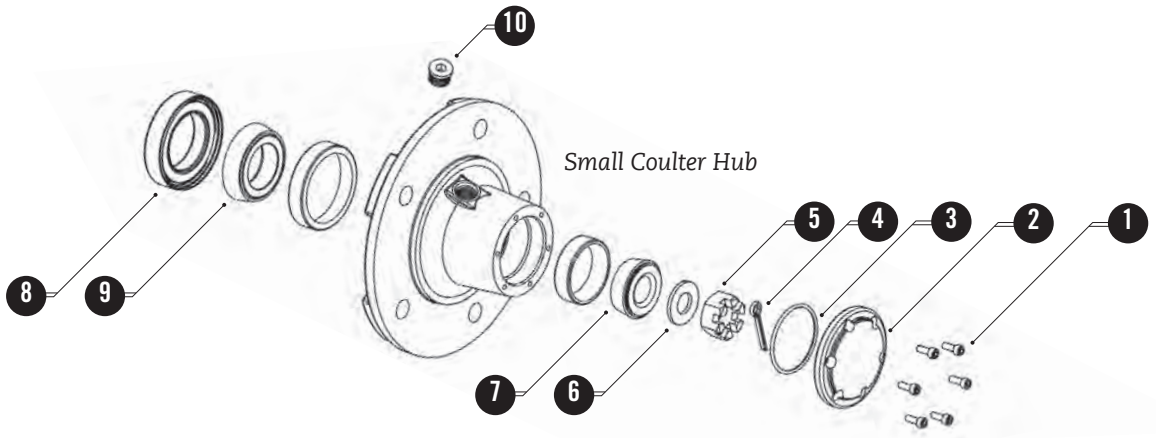

9.1.5 ROUTINE MAINTENANCE: COG WHEEL HUB BEARING AND SEAL REPLACEMENT

1 | Unfold and fully lower machine to the lift locks and tilt the toolbar until the tilt cylinders bottom out before performing service.

2 | Place tractor transmission in park, stop engine, and remove key. Chock tires.

3 | Relieve air pressure from the row unit down force system.

4 | Remove two bolts from the spindle of the deep tillage hub assembly located on the lower arms. An assistant must be firmly holding the cog wheel and hub assembly prior to the removal of the bolts.

5 | Place the cog wheel and deep tillage hub assembly on a bench.

6 | Remove twelve bolts, nuts, and cog wheel from hub.

7 | Remove lock nut (1).

8 | Loosen two set screws (2) and collar (3).

9 | Remove oil seals (4), bearings (5), and spindle (6) from hub.

10 | Clean and inspect bearings, bearing cups, hub, and spindle.

11 | Replace any parts that are damaged or worn.

12 | If a bearing or bearing cup must be replaced, replace both bearings and bearing cups. Do not install a new bearing in a used bearing cup. Use a press and correct size drivers to remove and install bearing cups in hub.

13 | Install bearing on long side of hub.

14 | Install new seal (4) with flat side facing up, away from the hub face with a press and Seal Installation Tool.

15 | Turn hub over and install bearing on short side of hub.

16 | Install new seal with flat side facing up, away from the hub face with a press and Seal Installation Tool.

17 | Install spindle with new O-Rings (8) into short end of hub.

18 | Install seal collar (3) until collar seats in seal.

19 | Install lock nut (1) and tighten to 100 foot-pounds of torque.

20 | Back lock nut (1) off ⅛ turn.

21 | Tighten two set screws (2).

22 | Remove oil plug (7) and add 6 ounces of Schaeffer 75–90 Gear Lube. Check amount by placing hub horizontal and filling till fluid until flows out. Install oil plugs. Rotate shaft and check for free movement.

23 | Place cog wheel on hub with the nut of the hub spindle on the right side of the cog wheel in its direction of travel.

24 | Install bolts and nuts. Place the nuts on the hub side thus the bolt goes through the cog wheel and into the hub. Be certain disk is installed in the correct direction of travel.

25 | Position cog wheel with hub to the lower cog wheel arm and install two bolts.

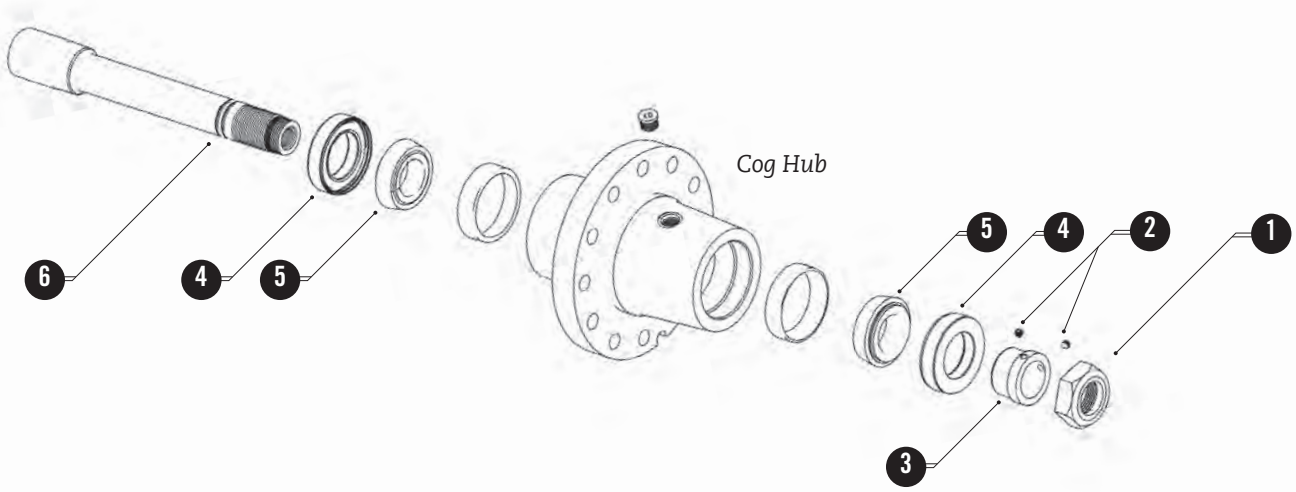

9.1.6 ROUTINE MAINTENANCE: GAUGE WHEEL BEARING REPLACEMENT

1 | Unfold and fully lower machine to the lift locks and tilt the toolbar until the tilt cylinders bottom out before performing service.

2 | Place tractor transmission in park, stop engine and remove key. Chock tires.

3 | Relieve air pressure from the row unit down force system.

4 | Support the gauge wheel and remove two bolts (1). Be sure to note the washer placement. There are two flat washers on the right side between the spindle and gauge wheel arm and one on the left side between the spindle and gauge wheel arm.

5 | Place the gauge wheel on a bench.

6 | Remove lock nut (1), loosen two set screws (2) and collar (3).

7 | Remove oil seals, bearings and spindle (7) from gauge wheel.

8 | Clean and inspect bearings, bearing cups, hub and spindle.

9 | Replace any parts that are damaged or worn.

10 | If a bearing or bearing cup must be replaced, replace both bearings and bearing cups. Do not install a new bearing in a used bearing cup. Use a press and correct size drivers to remove and install bearing cups in hub.

11 | Install new oil seal (4) with flat side facing up on first side, with a press and Seal Installation Tool.

12 | Install spindle with new O-Ring (8) installed on spindle into gauge wheel. Be sure that the portion of the shaft that seats to the seal is started.

13 | Place the gauge wheel on end with the threaded portion of the spindle up. Add about 6 ounces of Schaeffer Gear Lube through the space between the spindle and the oil seal. There are plugs in the gauge wheel assembly to add or check the oil level.

14 | Install bearing on side two. Install new oil seal with flat side facing up, with a press and Seal Installation Tool.

15 | Install bearing collar (3) until it seats in seal.

16 | Install lock nut (1) and torque to 100 foot-pounds.

17 | Back lock nut off ⅛ turn.

18 | Tighten two bearing seat set screws (2).

19 | Rotate gauge wheel and check for free movement. The gauge wheel may turn hard due to the type of oil seal and torque specs used.

20 | Install gauge wheel onto the row unit. Be sure support the gauge wheel. Place the nut side of the spindle to the right. Be sure to note the washer placement. There are two flat washers on the right side between the spindle and gauge wheel arm and one on the left side between the spindle and gauge wheel arm. Install two cap screws, star washers and flat washer into the spindle.

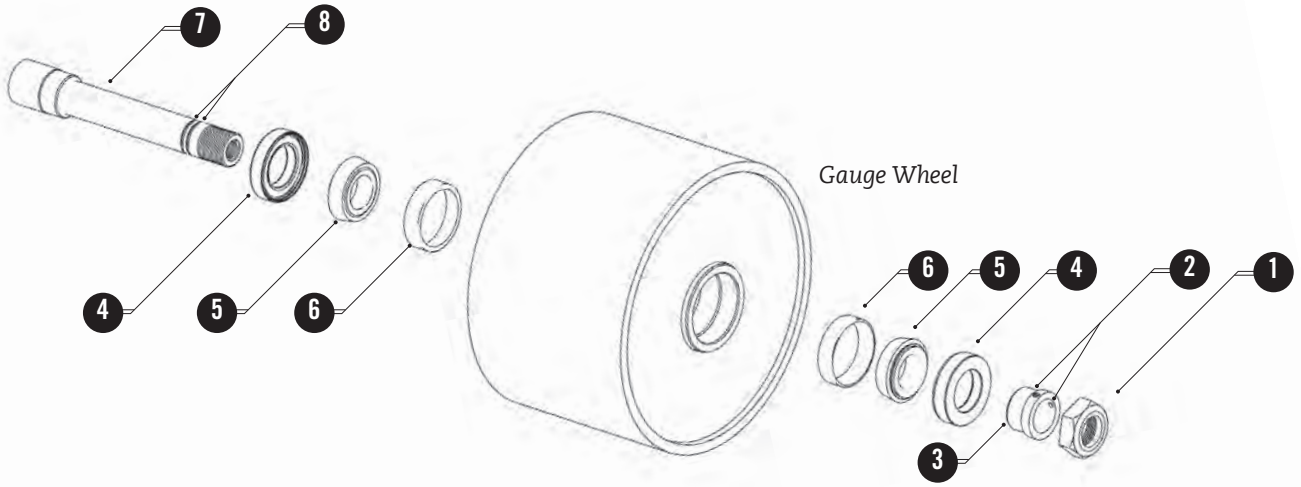

9.1.7 ROUTINE MAINTENANCE: COG WHEEL TILLAGE BIT REPLACEMENT

Cog wheels and tillage bits need to be replaced periodically.

Replace tillage bits when the broad end of the bit is worn off and the tip is the same width as the cog wheel. Bits wear differently depending on where they are located. There will be more wear in bits located on tramlines.

Cog wheels should be replaced when they no longer hold bits.

IMPORTANT: *Always wear gloves and safety glasses when removing and installing bits.*

Bit Removal

The best way to remove the tillage bits is to cut them off with a cutting wheel on an angle grinder.

1 | Raise the toolbar and secure the safety locks.

2 | With a cutting disk on an angle grinder, cut the bit above the square slot on the cog. Repeat on the other side.

3 | Once both sides of the tillage bit have been cut off, the remainder of the bit can be driven off with a hammer.

Bit Replacement

1 | Position the bit so the angled side points toward the long angle of the cog and the square edge points toward the short edge of the cog.

2 | Position the retaining tab over the bit slot in the cog.

3 | Start the bit in the cog wheel with a brass or lead hammer. (Steel hammers may generate sparks and chips).

4 | Strike the bit until it bottoms out in the slot and the retaining tab snaps into the square hole.

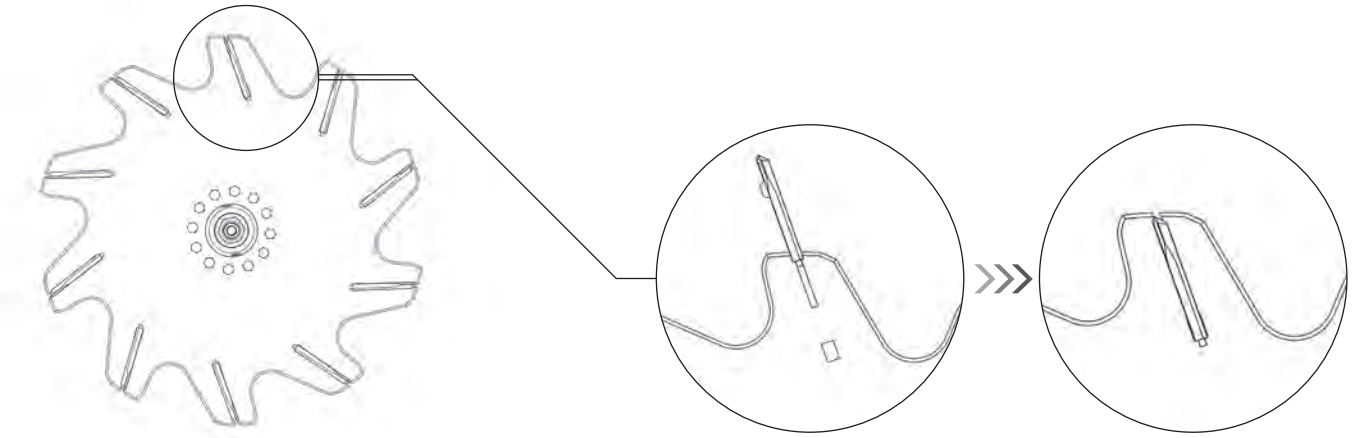

Cog Wheel with Tillage Bits *Installing bit* *Bit Installed*

9.2.1 PRE-SEASON MAINTENANCE: COULTER HUB LUBRICANT LEVEL

1 | Clean the area around the plug (1) on the coulter or tillage hub.

2 | Remove the plug and rotate the hub so the hole is at the 3 o'clock position.

3 | Check the quality and quantity of lubricant in the hub.

4 | Add Schaeffer 75–90 Gear Lube as needed until lubricant is present with the hub hole at the 3 o'clock position.

5 | Install and tighten plug.

9.2.2 PRE-SEASON MAINTENANCE: PRE-LOAD HUB ADJUSTMENT

In addition to checking the fluid level of each hub, check the hub for pre-load. Unlike hubs with grease, the hub pre-load of an oil bath hub is slightly higher.

Check the hub pre-load by using the following procedure:

1 | Put on a glove.

2 | Grab the upper part of the coulter about 2 o'clock and with a firm action, give the coulter a fling downward.

3 | If the coulter rotates more than 1.5 revolutions, the pre-load is too loose. If the hub rotates less than ¾ of a rotation, the hub pre-load is too tight.

4 | If the pre-load is out of the rotational test complete the following:

- Remove the 6 screws on the hub cap.
- Remove the cotter pin retaining the castle nut.
- Loosen or tighten the castle nut to allow the hub to be adjusted to fit the rotation test criteria.

5 | Retest the hub pre-load as listed above.

6 | Re-install the cotter pin, hub cap and screws.

7 | Re-fill with lube to correct level.

Keep in mind that when the hub cap is removed, all the oil will run out. After re-installation of the cotter pin and the hub cap, re-fill the hub.

9.3 END OF SEASON MAINTENANCE: CLEANING OUT DRY FERTILIZER METER BODY SYSTEM

1 | Empty tanks of all products.

2 | Place tractor transmission in park, stop engine, and remove key. Chock tires.

3 | Remove the front meter roll access door. Consider doing this in the field.

4 | Remove all meter roll block-off plates and the T-bar for the block-off shield.

5 | Remove all capped-off runs and hoses from the rear of each meter body.

6 | Remove the collector bottom insert.

7 | The removal of all the previous mentioned items is needed to allow cleaning of all the system's components.

8 | Start at the top of the tank and wash downward, both on the inside and outside of the tanks. Be sure to wash with a pressure washer all areas of the tanks, meter rolls, and meter body.

9 | Do not direct the pressure washer at the bearing seals and the application rate sensor. Apply ample amounts of WD-40 to the meter body and rolls after the system has dried.

10 | Re-install all components.

INSPECT UNIT FOR WORN PARTS. ORDER AND INSTALL BEFORE NEXT USE.

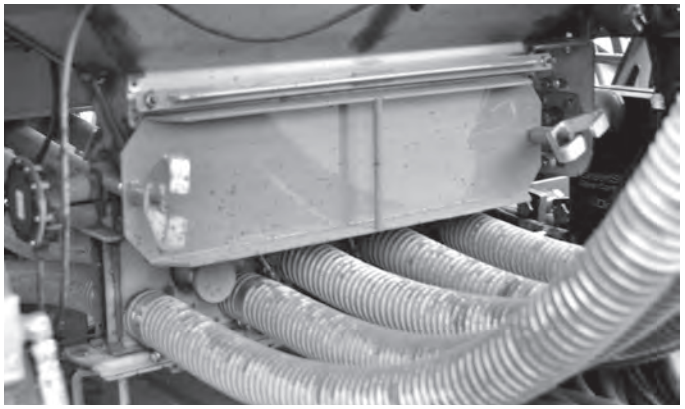

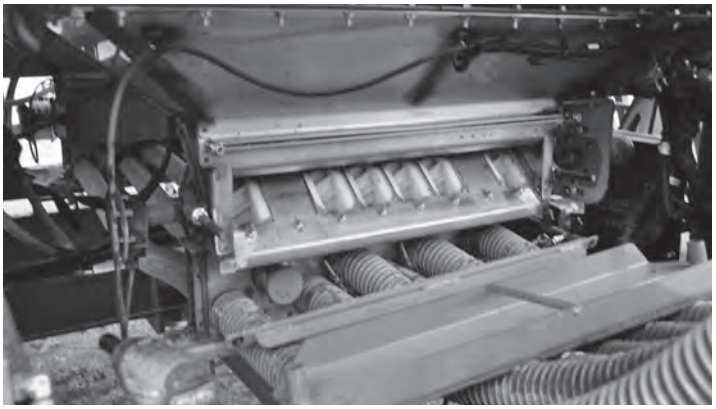

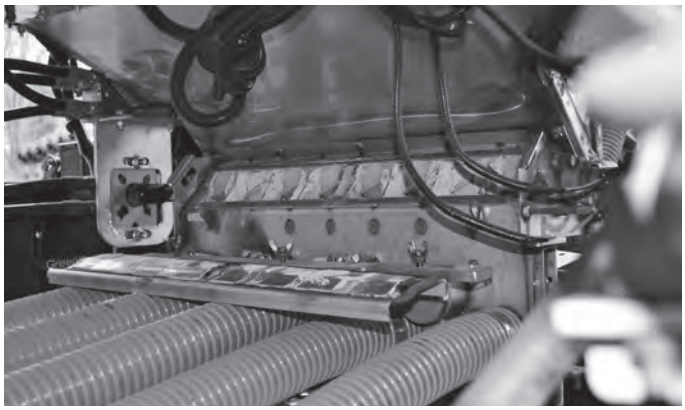

TOP: Meter roll with access door attached
BOTTOM: Meter roll rear access door removed

TOP: Meter roll with access door removed
BOTTOM: Meter roll collector bottom insert

9.4 SERVICE AND MAINTENANCE OF THE LIQUID SYSTEM

When using the unit for tillage only, remove nozzles and plug to prevent lines from filling with debris.

Flush out system with water. Clean screens and control panel. Wash machine to prevent corrosion of valves and hydraulic fittings.

If storing for winter months, run RV anti-freeze through the lines to protect from freezing.

- 8 row machines require 6 gallons
- 12 and 16 row machines require 12 gallons
- 24 row machines require 15 gallons

10 STORAGE

1 | Thoroughly clean all fertilizer from the machine.

2 | Flush the fertilizer tubes, liquid pumps, liquid plumbing, and meter bodies with clean water.

3 | Liquid pumps and plumbing must be winterized to prevent freezing. Damage from frozen fluids will void any and all warranties.

4 | Leaving fertilizer in the meter body will cause severe rust and damage to its assembly. Wash completely and apply ample amounts of WD-40.

5 | Use a pressure washer to thoroughly clean the unit.

6 | Check the oil level in all of the hubs after each season. Add oil if needed.

7 | Remove and clean the air filter on the air compressor.

8 | Tighten any loose nuts and bolts.

9 | Grease all fittings.

10 | Store the machine inside a building so it is not affected by weather.

11 | Inspect unit for worn parts. Order and install before next use.